Project topic: CD4093B

4 NAND gates with hysteresis

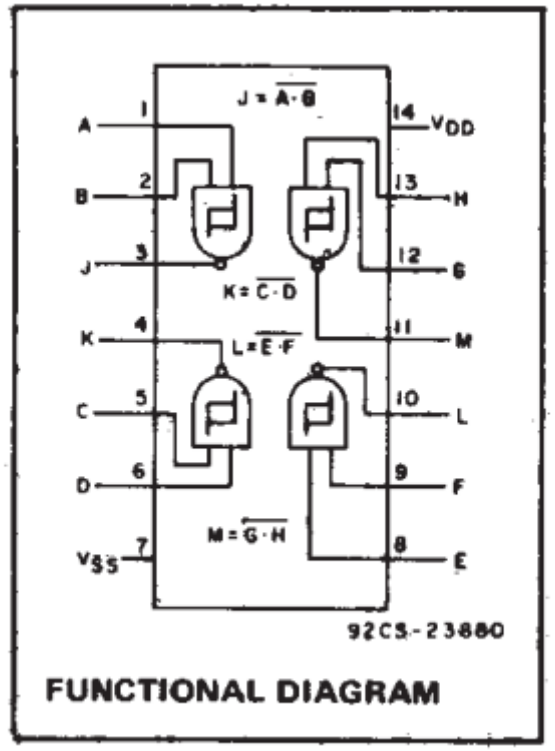

FUNCTIONAL DIAGRAM

Project requirements

- Technology: CMOS TSMC 180 nm, 1P6M, 1.8 V
- Latch-up protection
- Electromigration protection
- PAD cells with dimensions (width × length): 60 µm × 70 µm, in no-devices-under-pad configuration
- ESD protection implemented using diodes or transistors
- Output current drive capability: IO ≥ 15 mA (DC) under conditions:
  - VDD = 1.8 V ±10%
  - Temperature range: −30°C to +125°C
- Output frequency: at least 30 MHz with 25 pF load, under conditions:
  - VDD = 1.8 V ±10%
  - Temperature range: −30°C to +125°C

Single gate schematic

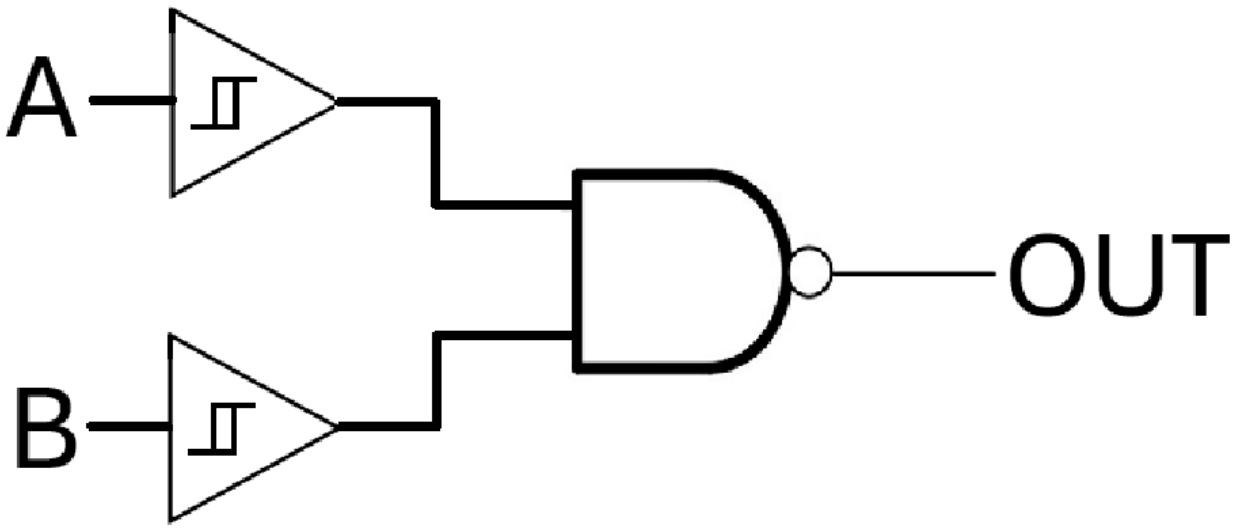

NAND gate

```
.subckt NAND A B out vdd vss
M1 vdd A out vdd PFET l=.2u w=.8u
M3 out A 1 0 NFET l=.2u w=.4u
M2 vdd B out vdd PFET l=.2u w=.8u
M4 1 B 0 0 NFET l=.2u w=.4u
.ends
```

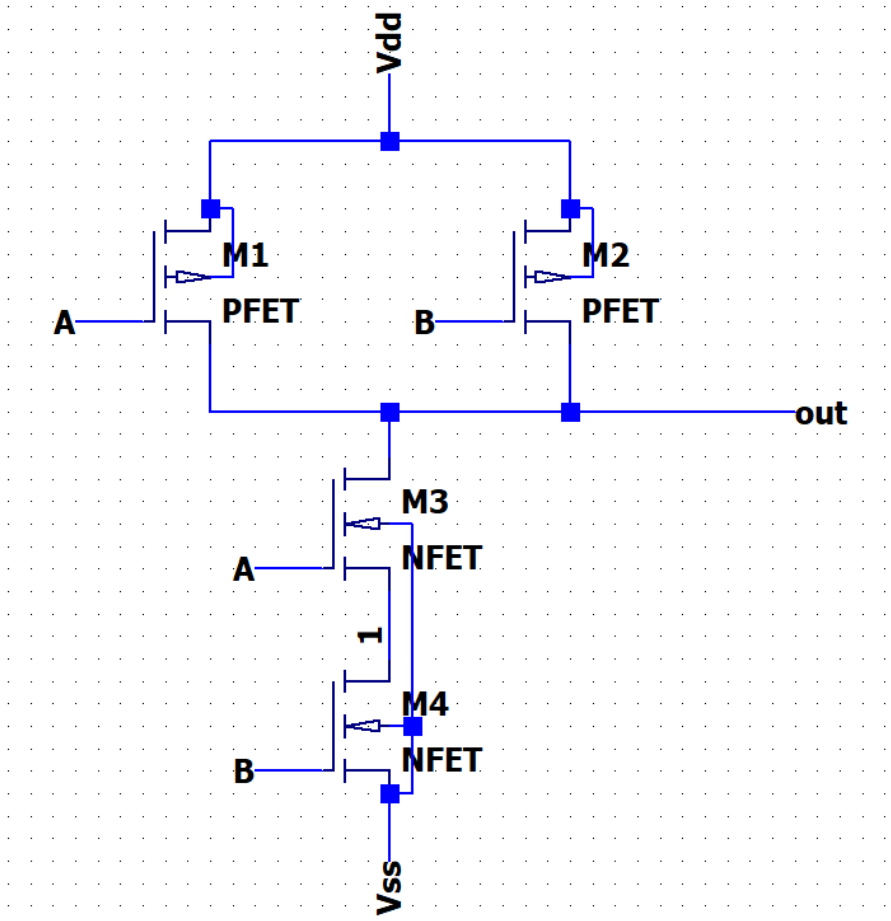

Schmitt Trigger (non-inverting version)

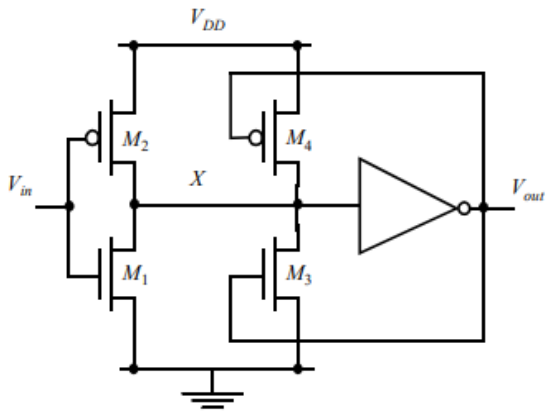

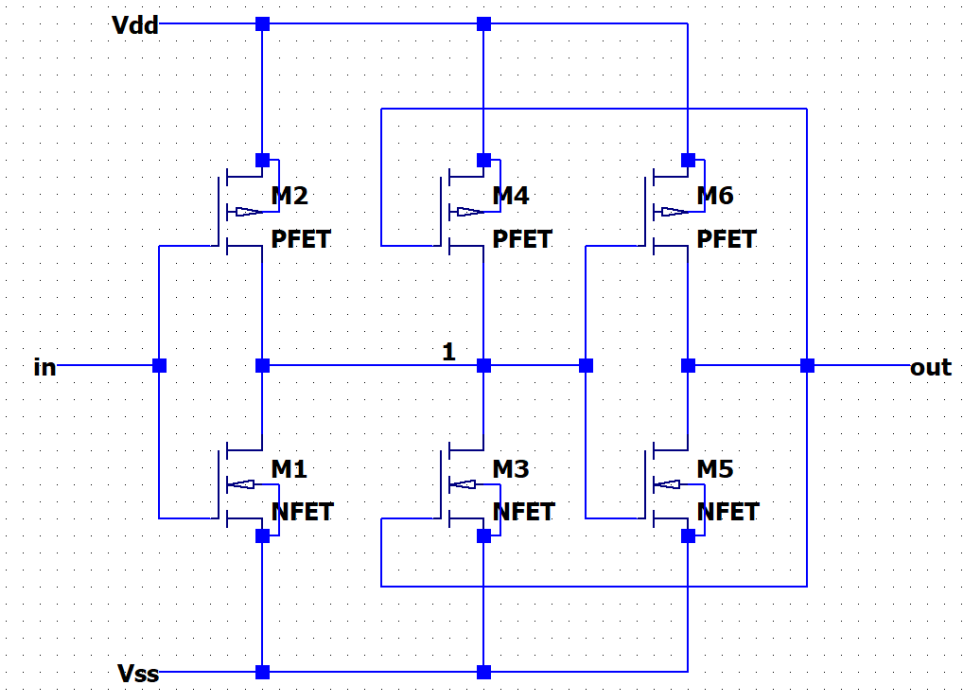


```
.subckt SCHMITT_TRIGGER in out vdd vss
M1 1 in vss vss NFET l=.2u w=2u
M2 vdd in 1 vdd PFET l=.2u w=4u
M3 1 out vss vss NFET l=.2u w=.4u
M4 vdd out 1 vdd PFET l=.2u w=.8u
M5 out 1 vss vss NFET l=.2u w=.4u
M6 vdd 1 out vdd PFET l=.2u w=.8u
.ends
```

Hysteresis loop of Schmitt Trigger

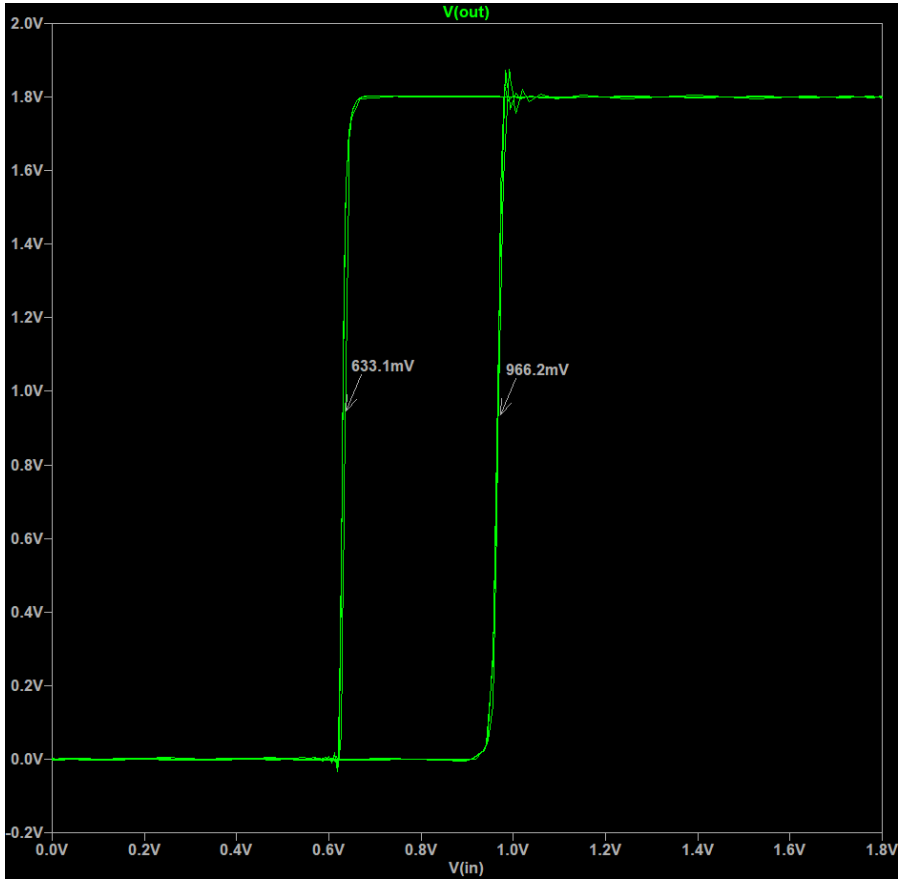

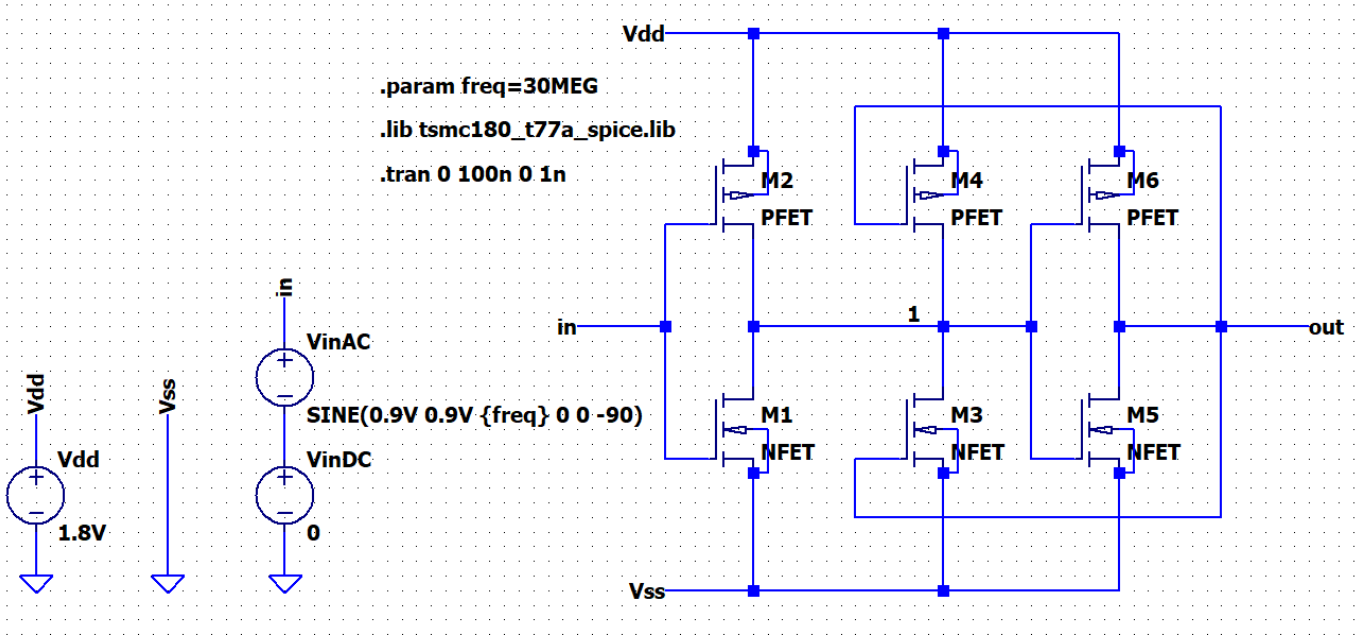

Vp = 966.2mV
Vn =633.1mV
Vh = Vp – Vn = 333.1mV (width of hysteresis loop)

Output buffer

```
.subckt OUTPUT_BUFFER in out vdd vss
M1 vdd in 1 vdd PFET l=.2u w=.8u
M2 1 in vss vss NFET l=.2u w=.4u
M3 vdd 1 2 vdd PFET l=.2u w=8.4u
M4 2 1 vss vss NFET l=.2u w=4.2u
M5 vdd 2 3 vdd PFET l=.2u w=89u
M6 3 2 vss vss NFET l=.2u w=44.5u
M7 vdd 3 out vdd PFET l=.2u w=938.7u
M8 out 3 vss vss NFET l=.2u w=469.4u
.ends
```

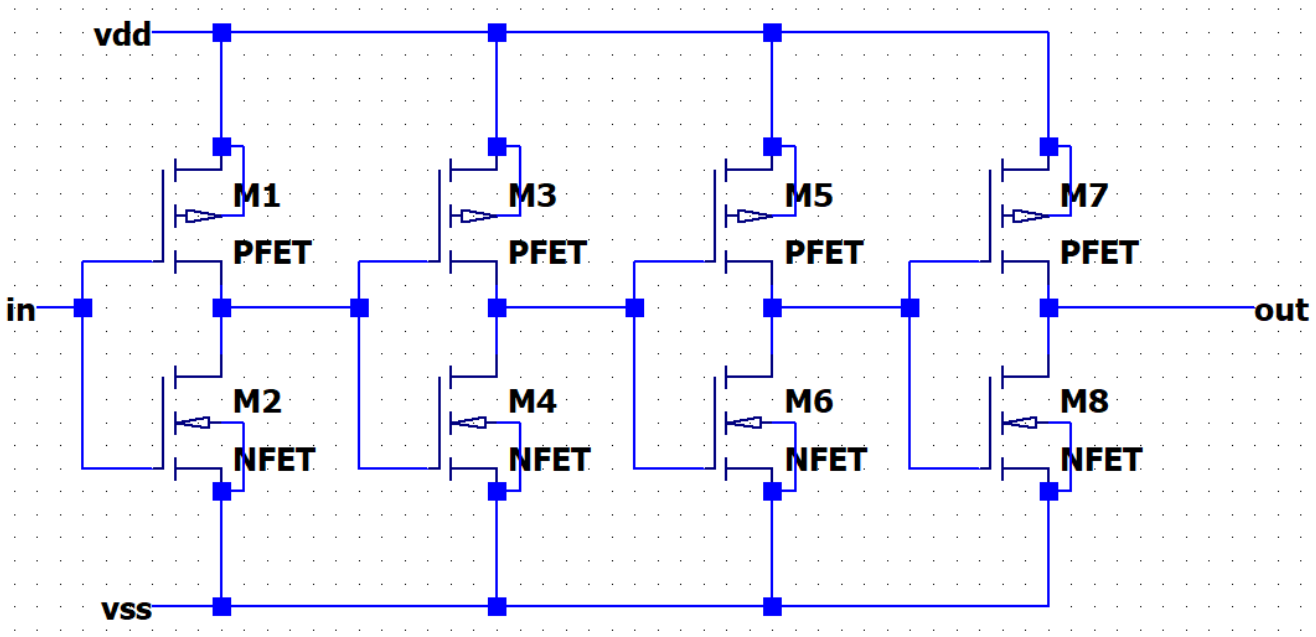

Theoretical calculations for buffer design

$$C_{ox} = \frac{\varepsilon_{ox}}{T_{ox}} = \frac{3{,}45 \cdot 10^{-11}\ F/m}{4{,}1 \cdot 10^{-9}\ m} \approx 8{,}415\ fF/\mu m^2$$

$$C_L = 25\,pF$$

$$C_G = C_{GN} + C_{GP} = 8{,}415\ fF/\mu m^2 \cdot 0{,}2\,\mu m \cdot (0{,}4\,\mu m + 0{,}8\,\mu m) =$$

$$= 2{,}02\ fF$$

przyjmujemy optymalną wartość $\alpha = e$

$$n = \frac{\ln\left(\frac{C_L}{C_G}\right)}{\ln \alpha} = \frac{\ln\left(\frac{25\,pF}{2{,}02\,fF}\right)}{\ln e} = 9{,}424$$

przyjmujemy $n = 9$

Theoretical calculations for buffer design

$$\alpha = \left(\frac{C_L}{C_G}\right)^{\frac{1}{n}} = \left(\frac{25\,pF}{2{,}02\,fF}\right)^{\frac{1}{9}} = 2{,}849$$

ze względów praktycznych wybieramy mniejszą liczbę stopni $n = 4$

$$\alpha = \left(\frac{25\,pF}{2{,}02\,fF}\right)^{\frac{1}{4}} = 10{,}55$$

liczymy teoretyczną wartość maksymalnej częstotliwości bufora

$$K'_n = \mu_n \cdot C_{ox} = 289{,}44\ \frac{cm^2}{V \cdot s} \cdot 8{,}415\ \frac{fF}{\mu m^2} = 243\ \mu A/V^2$$

$$K'_p = \mu_p \cdot C_{ox} = 112{,}39\ \frac{cm^2}{V \cdot s} \cdot 8{,}415\ \frac{fF}{\mu m^2} = 94{,}5\ \mu A/V^2$$

Theoretical calculations for buffer design

czas przejścia przez parę inwerterów:

$$t_{pid} = t_{LH} + t_{HL} = 2R_p C_G + 2R_N C_G = 26{,}77\,ps$$

$$t_{cay} = n\alpha t_{apd} = n\alpha \frac{t_{pid}}{2} = 4 \cdot 10{,}55 \cdot \frac{26{,}77\,ps}{2} = 564{,}8\,ps$$

odpowiadająca częstotliwość $= \frac{1}{2 \cdot t_{cay}} = 885{,}3\,MHz$

Buffer output waveform at 30 MHz

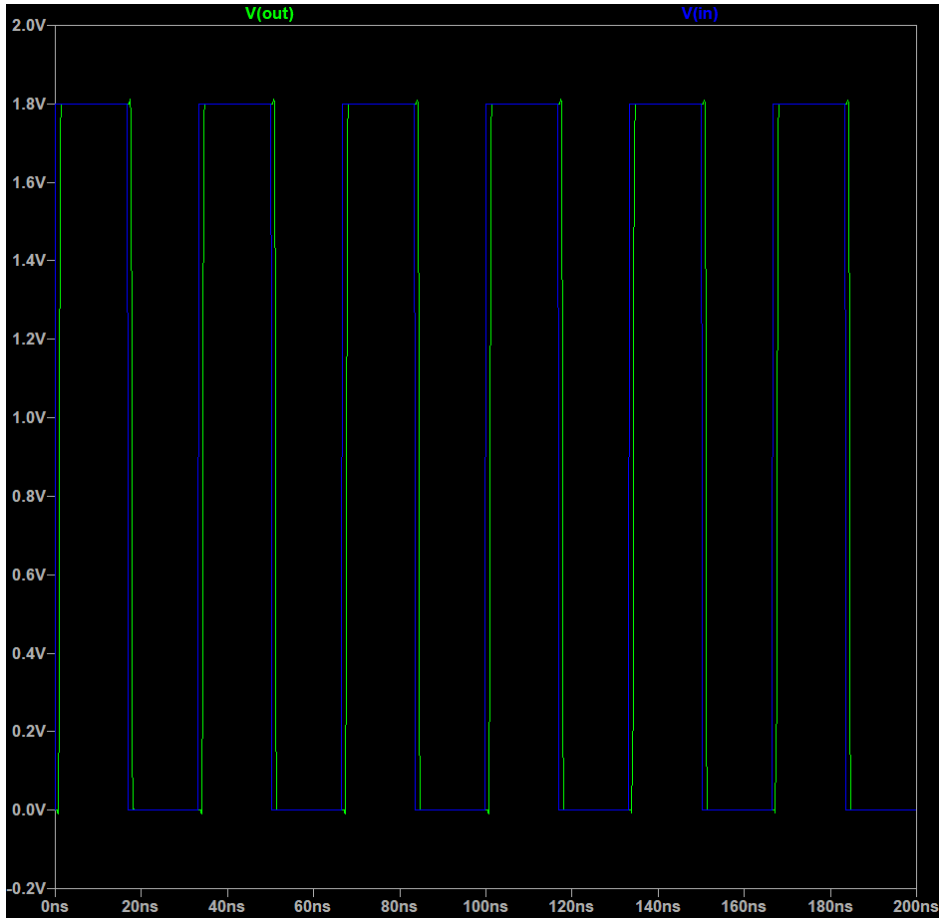

Buffer output waveform at 30 MHz for maximum and minimum temperature and VDD

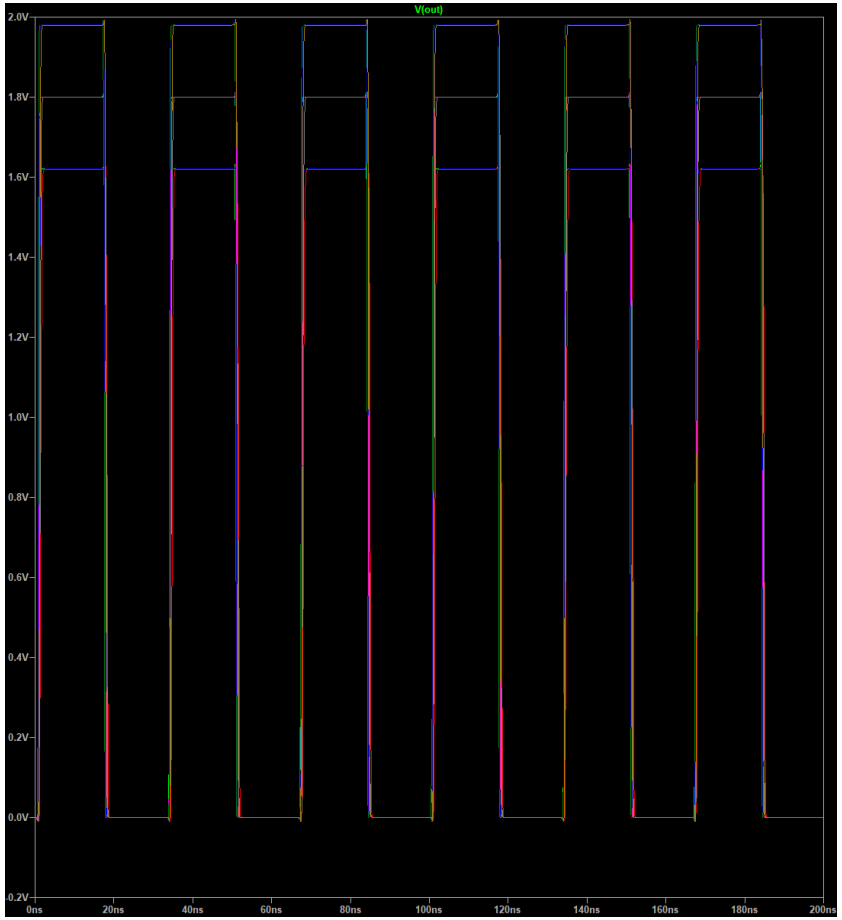

Maximum operating frequency of the buffer: approx. 630 MHz

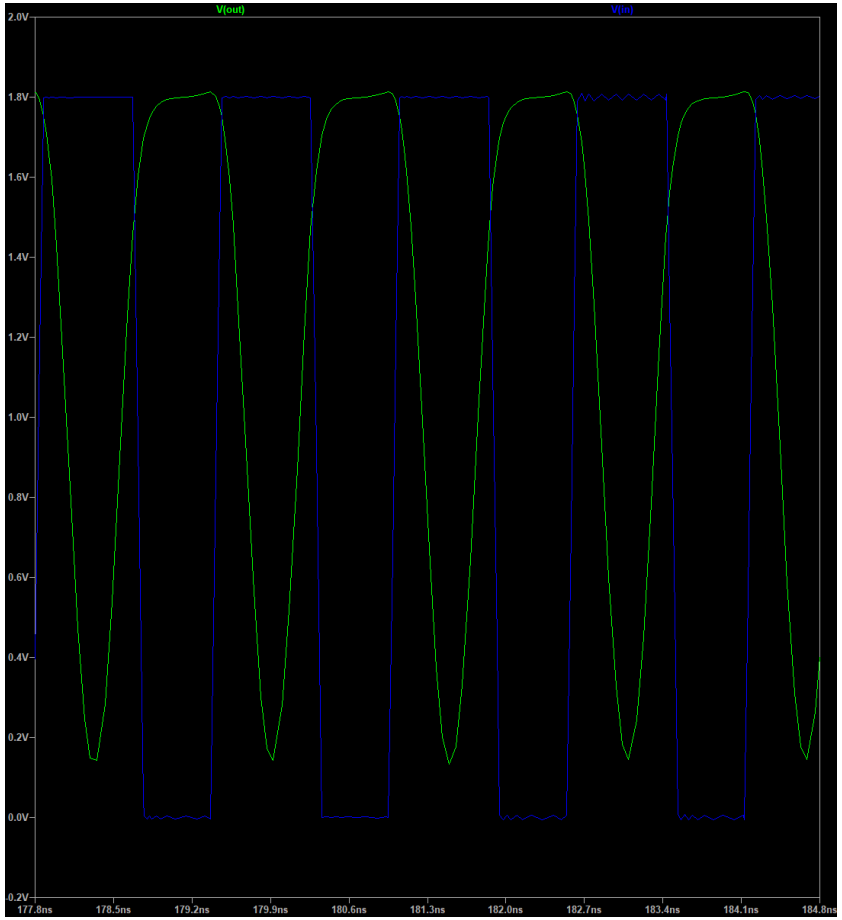

Rise time

Rising time is 326.1ps

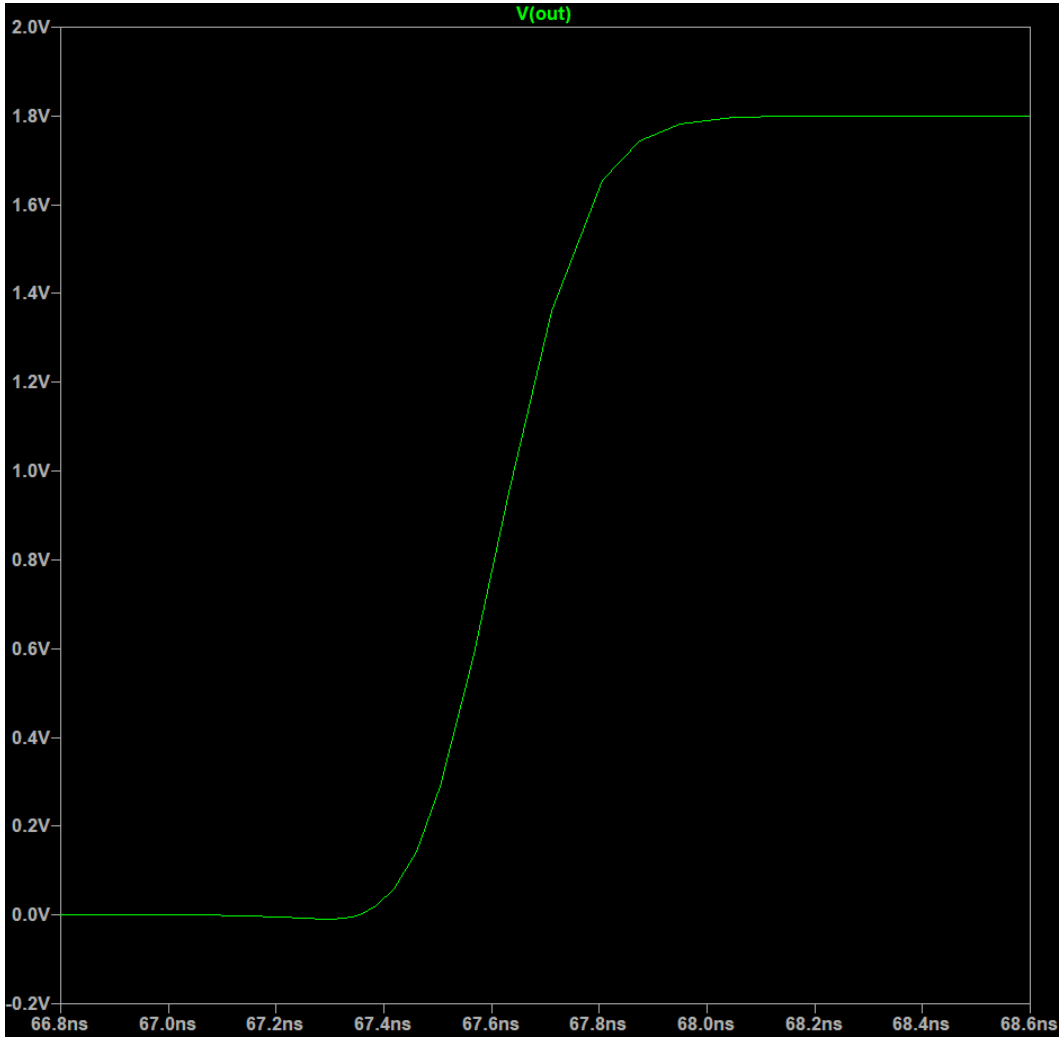

Fall time

Fall time is 313ps

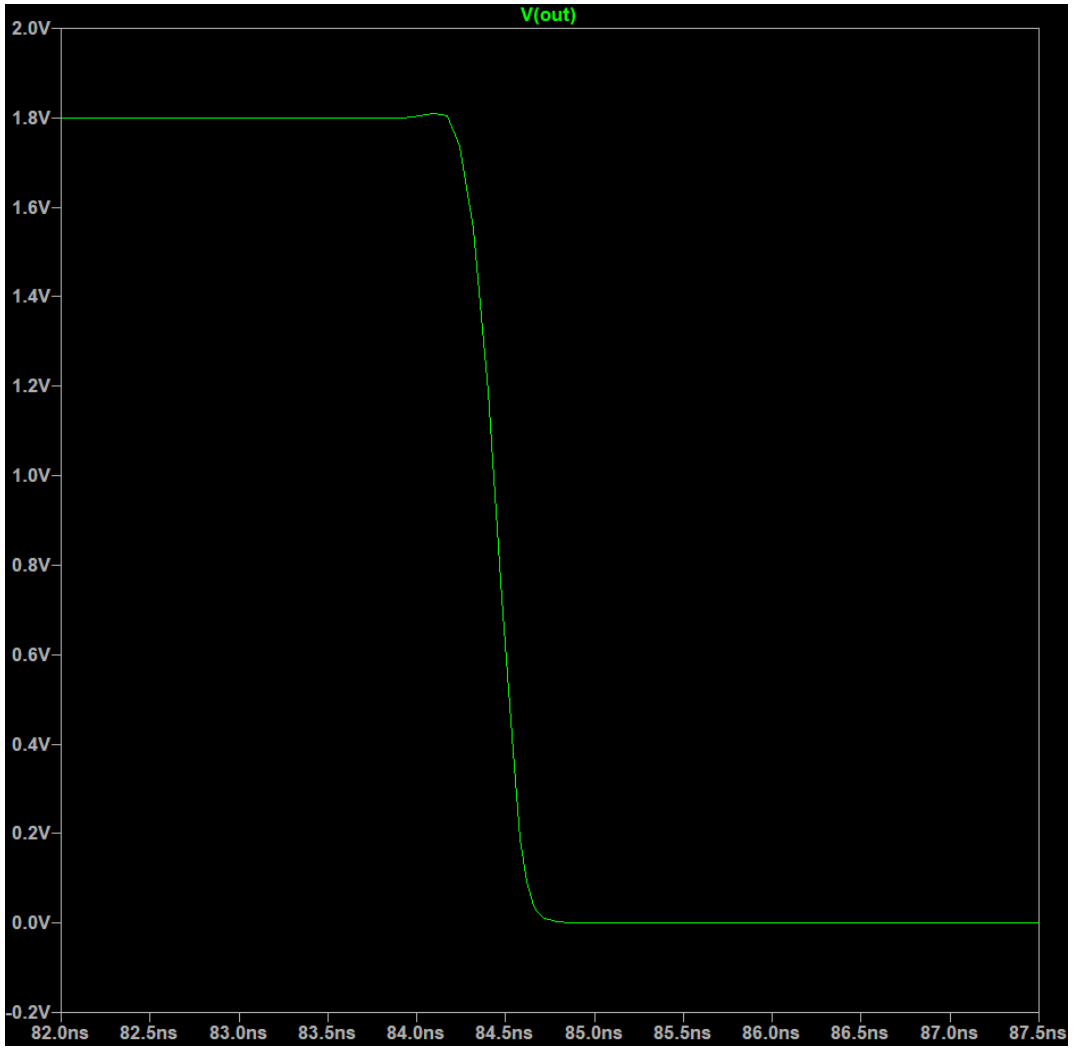

Buffer output current drive test (Io+)

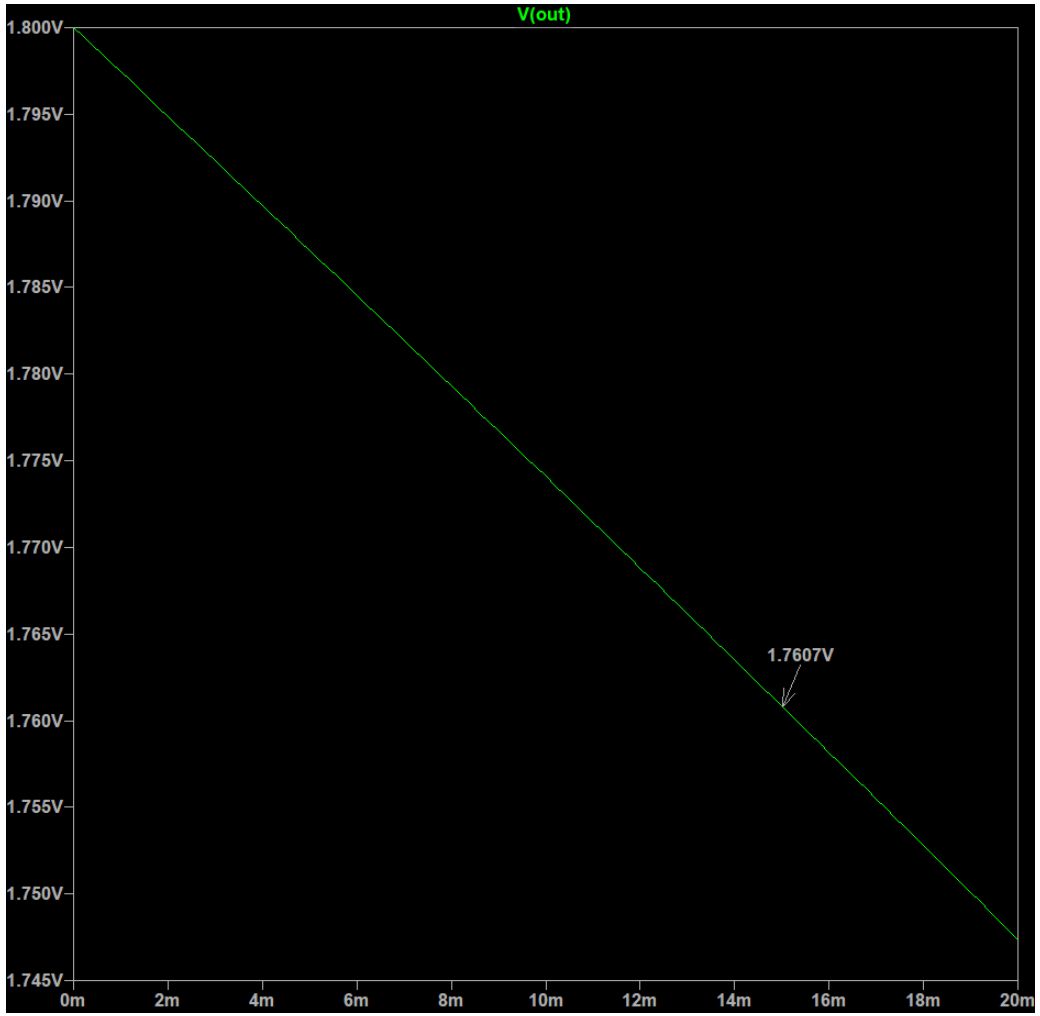

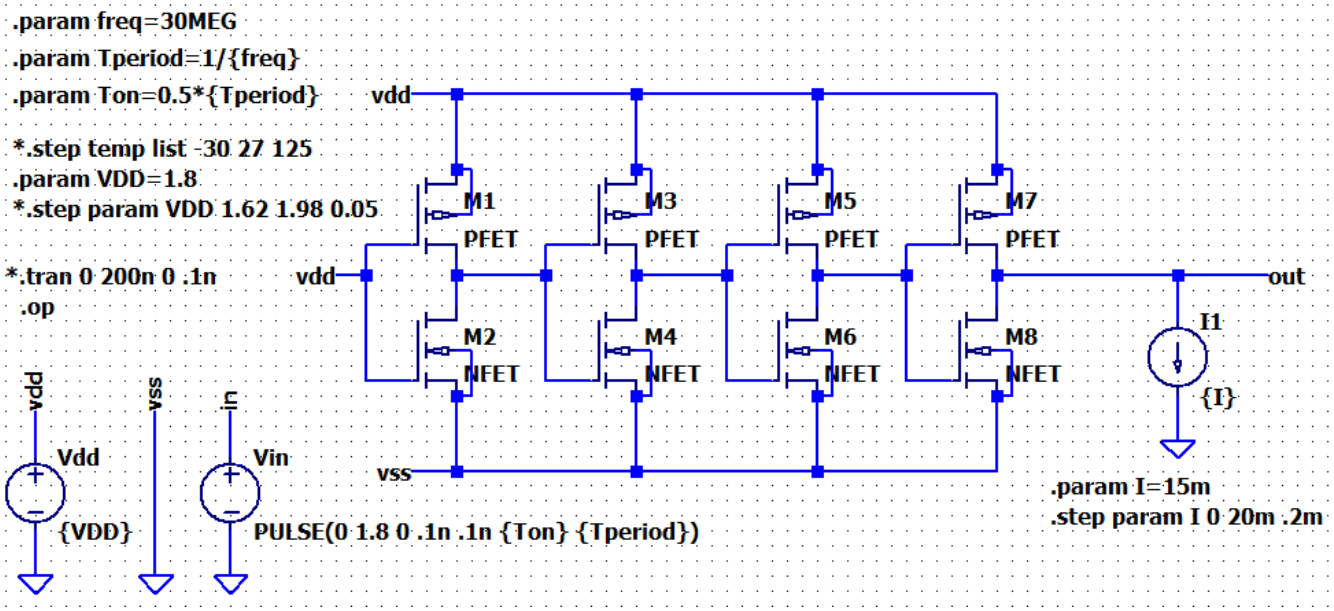

Vout for Io+ = 15mA is 1.76V

Buffer output current drive test (Io-)

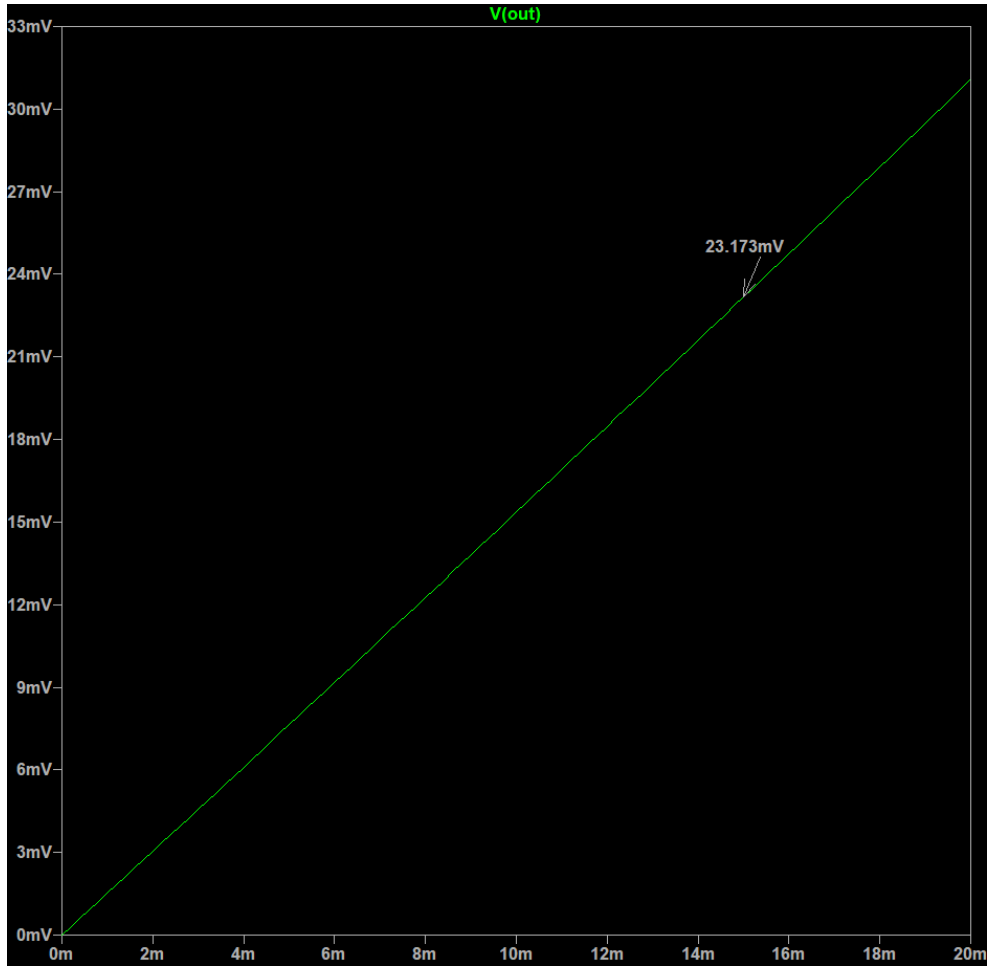

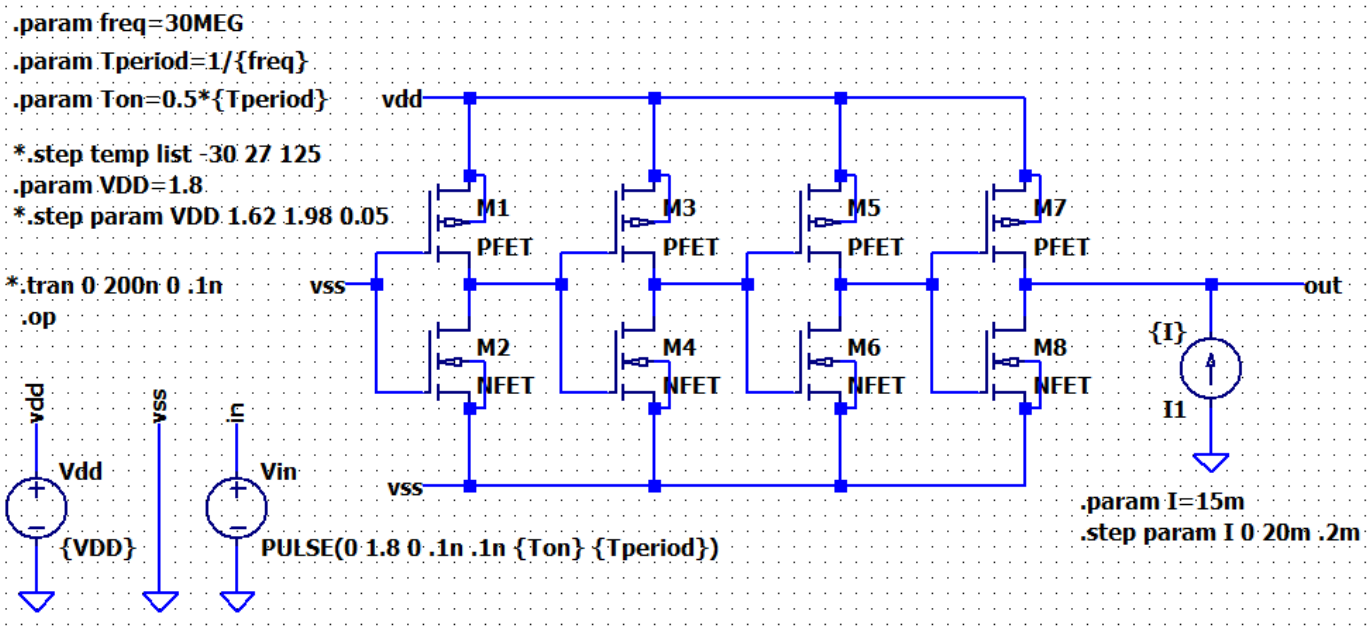

Vout for Io- = 15mA is 23.2mV

Full IC topography

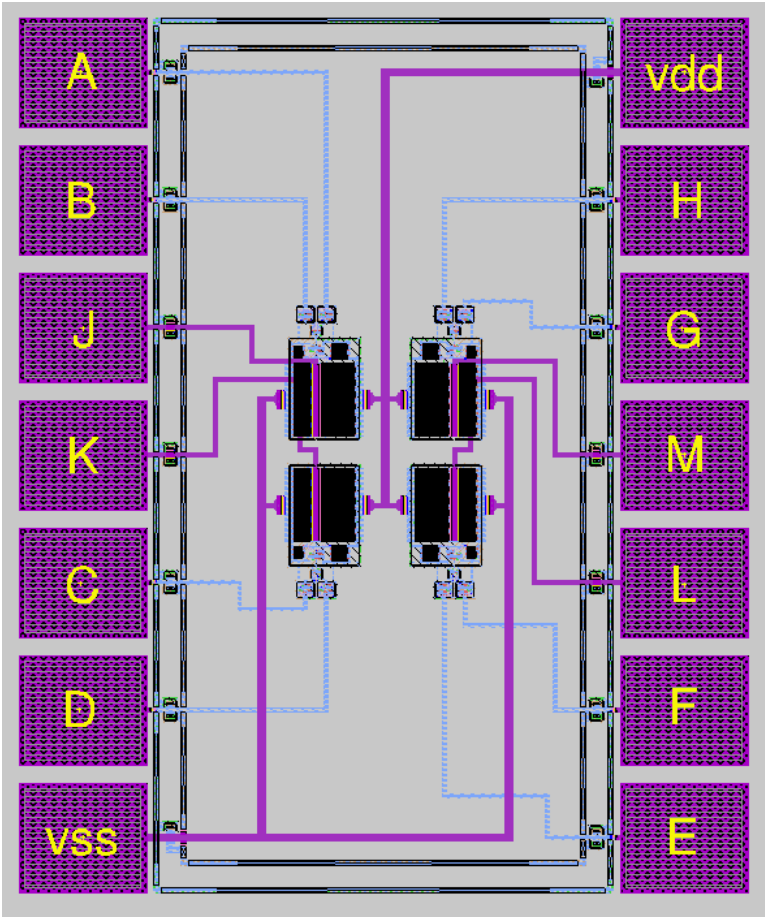

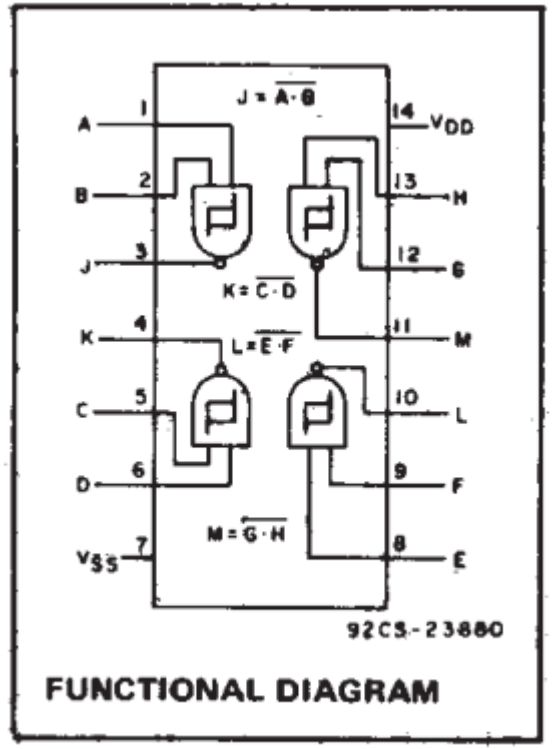

Schmitt Trigger

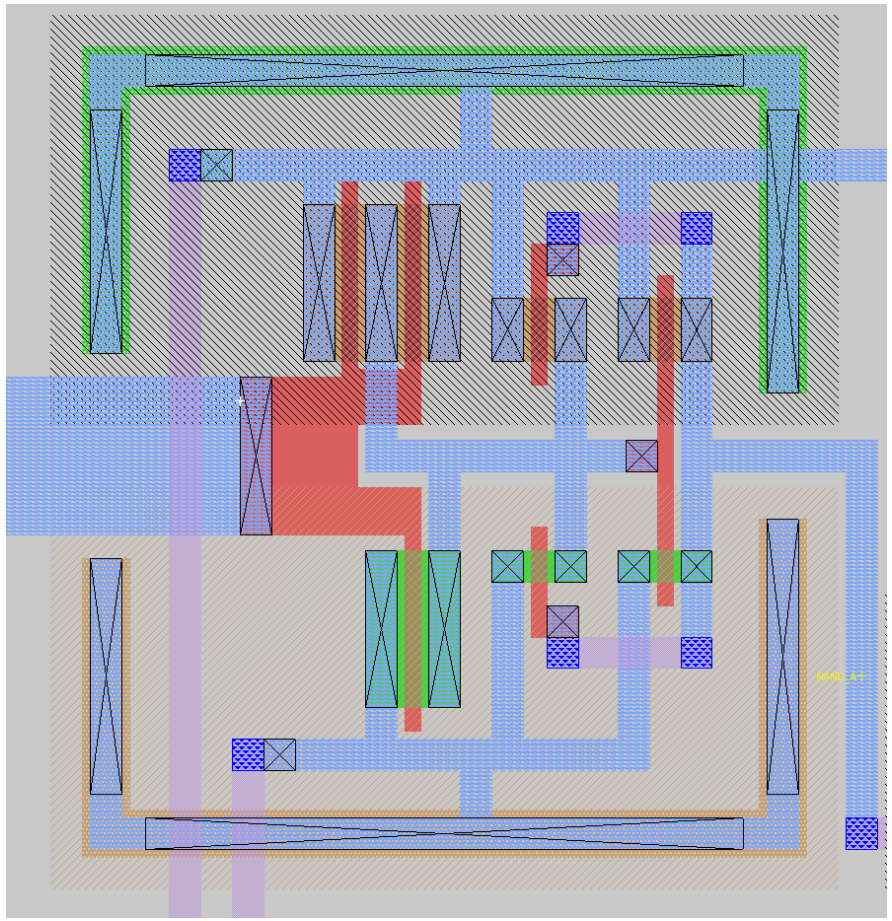

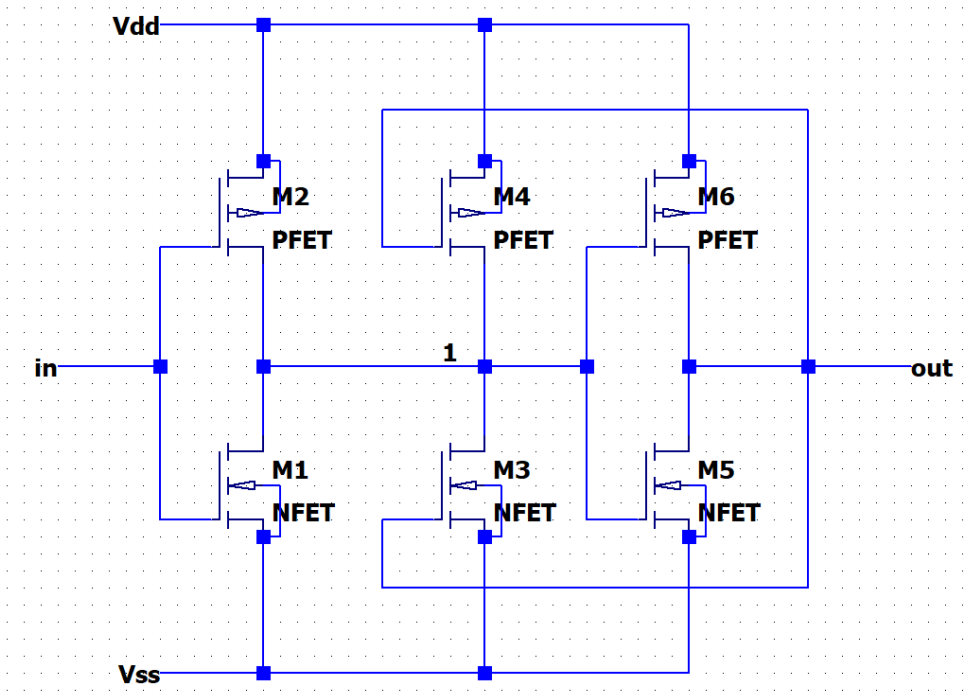

NAND gate without Schmitt Triggers

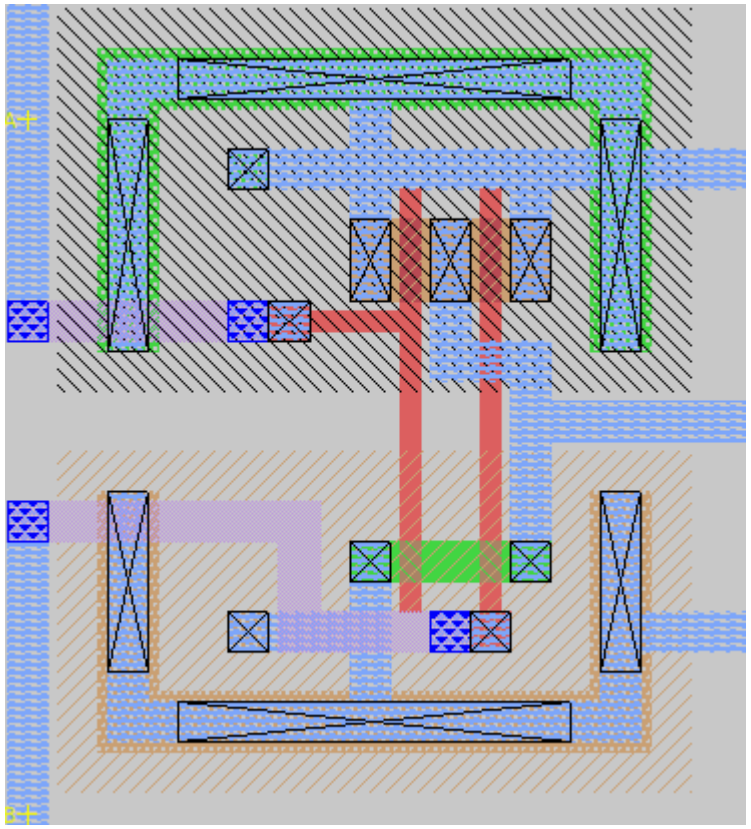

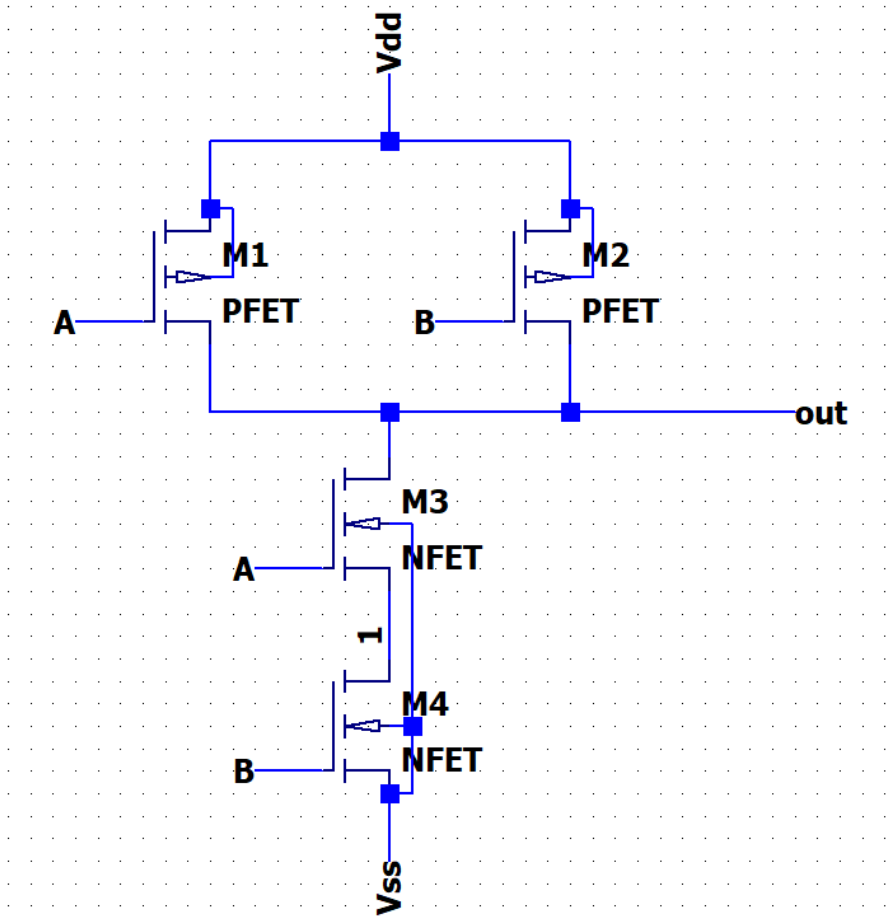

NAND gate with Schmitt Triggers

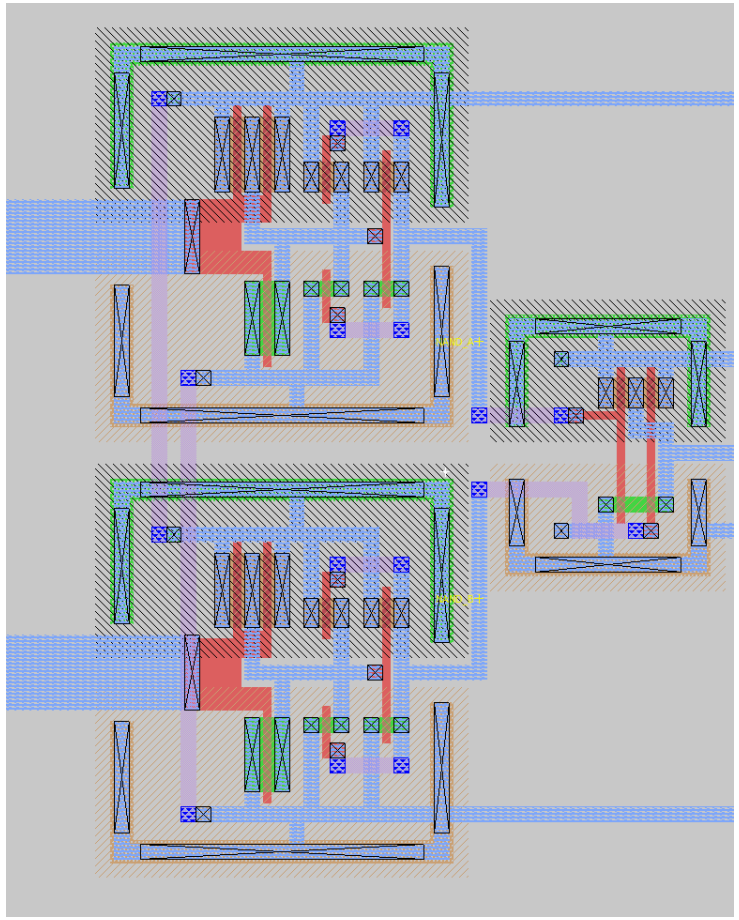

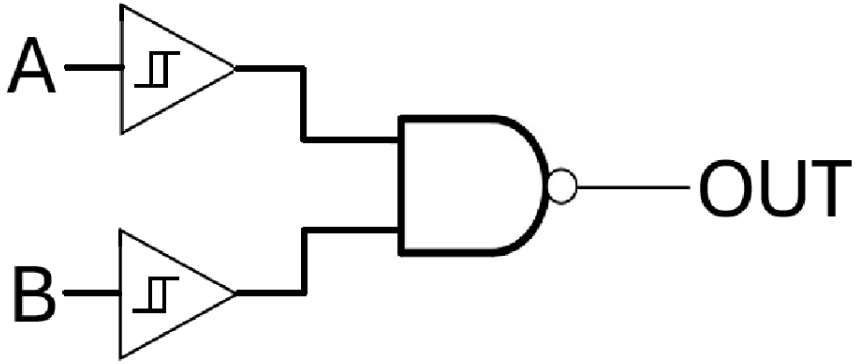

Output buffer

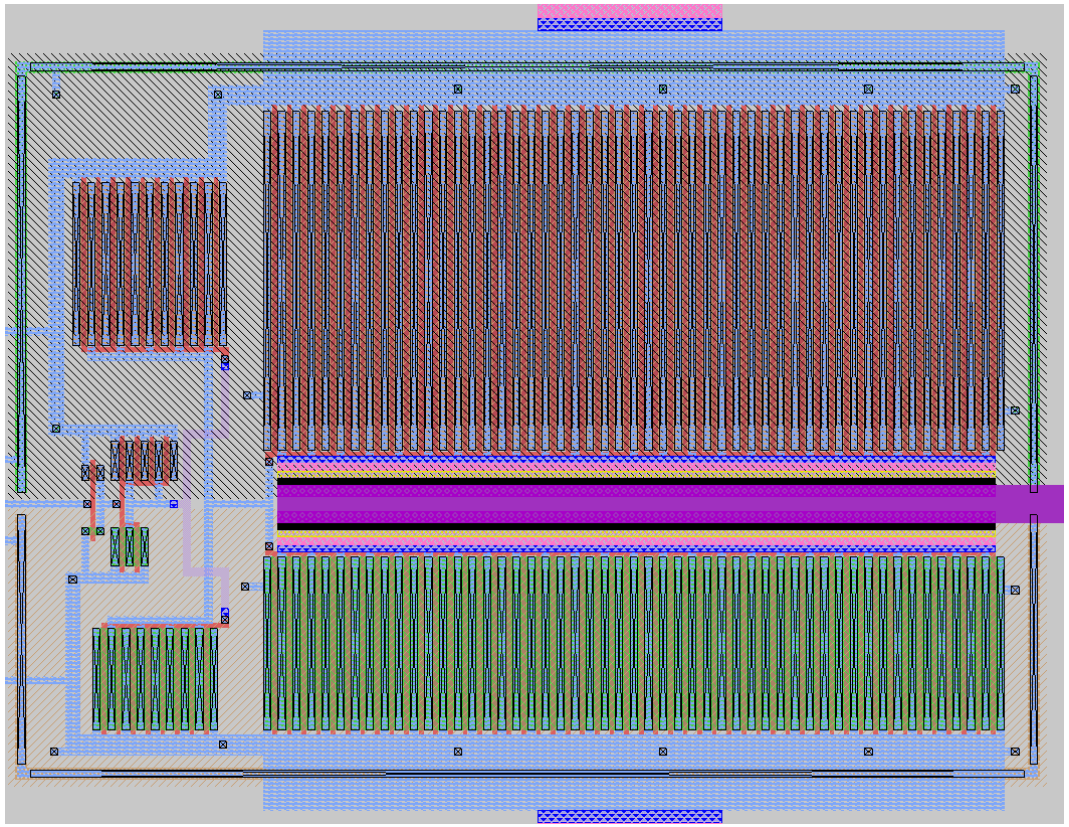

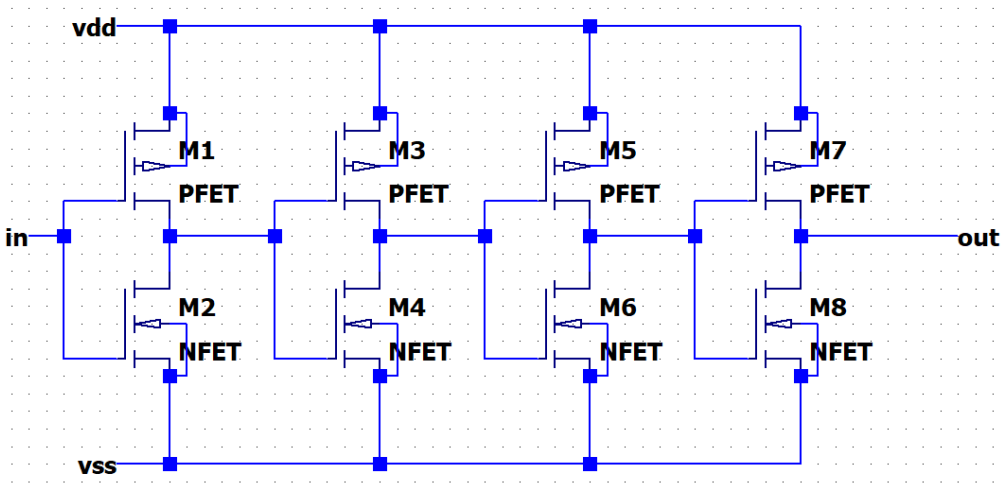

Gate and the buffer

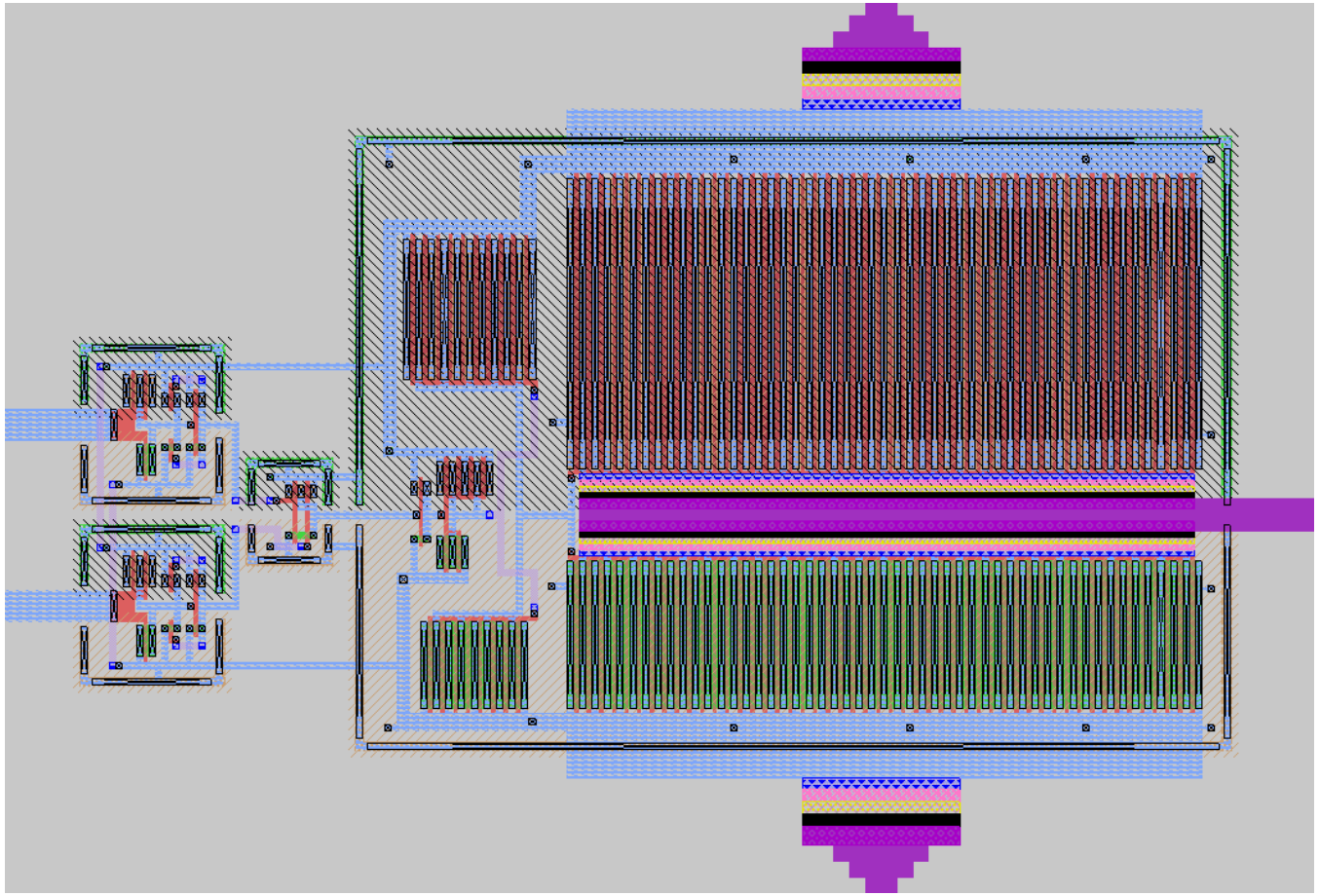

PAD

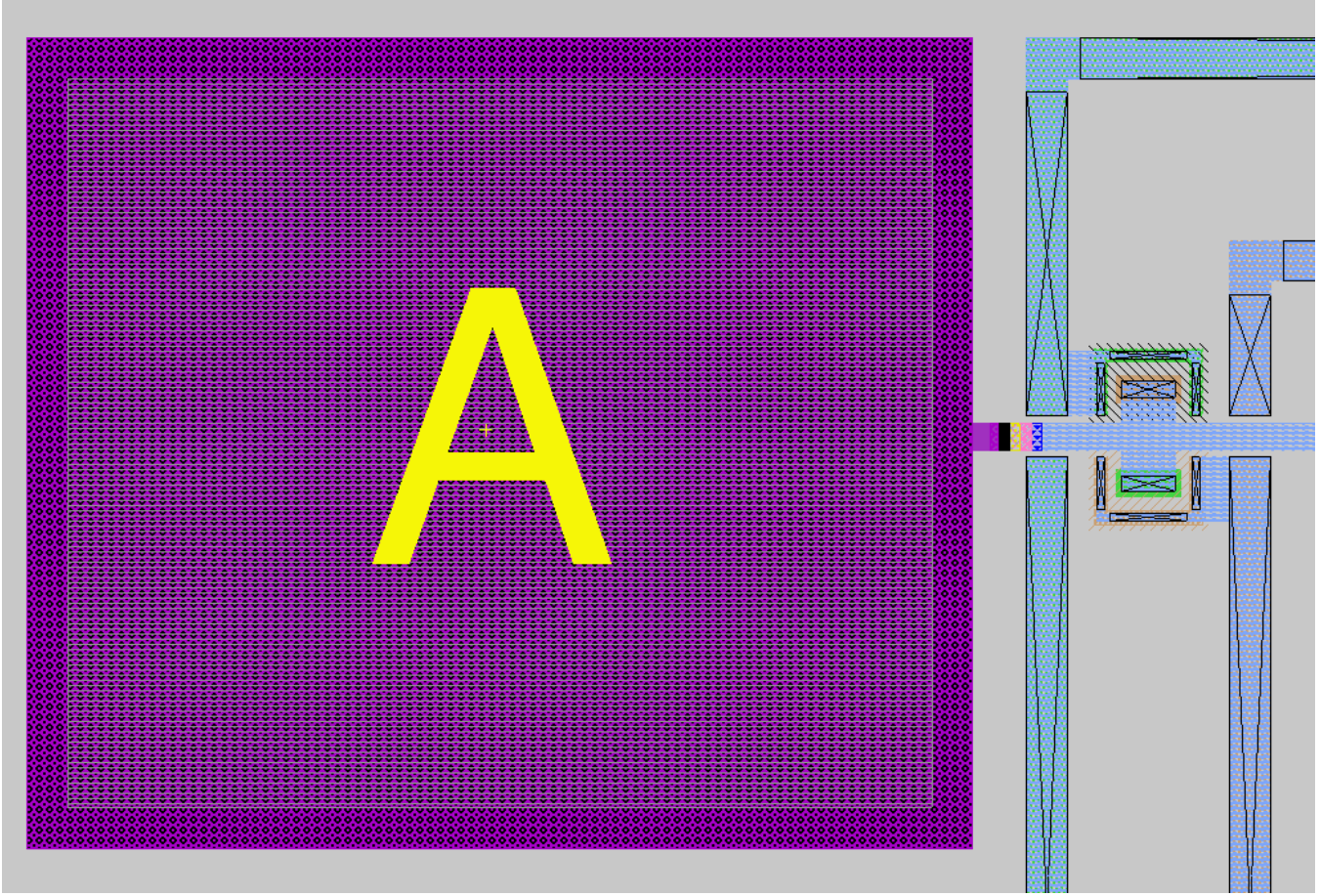

ESD protection

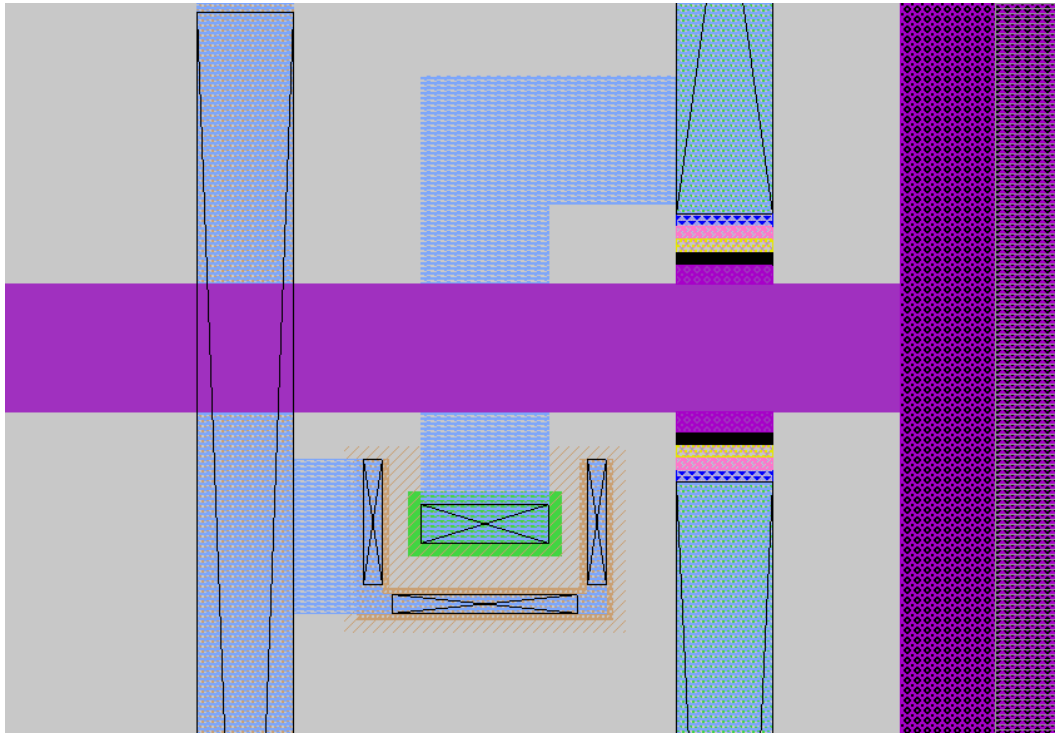

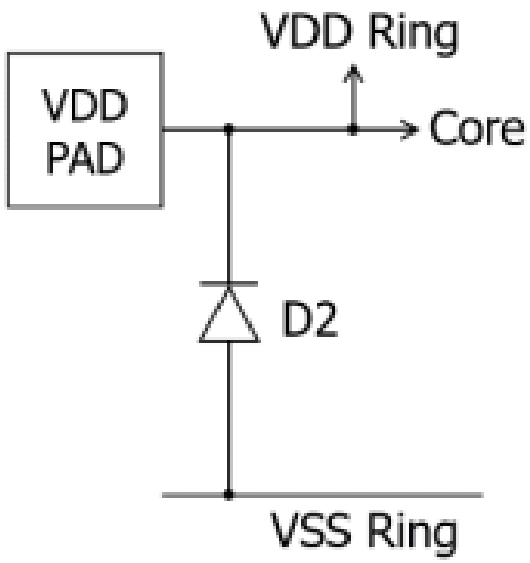

ESD protection

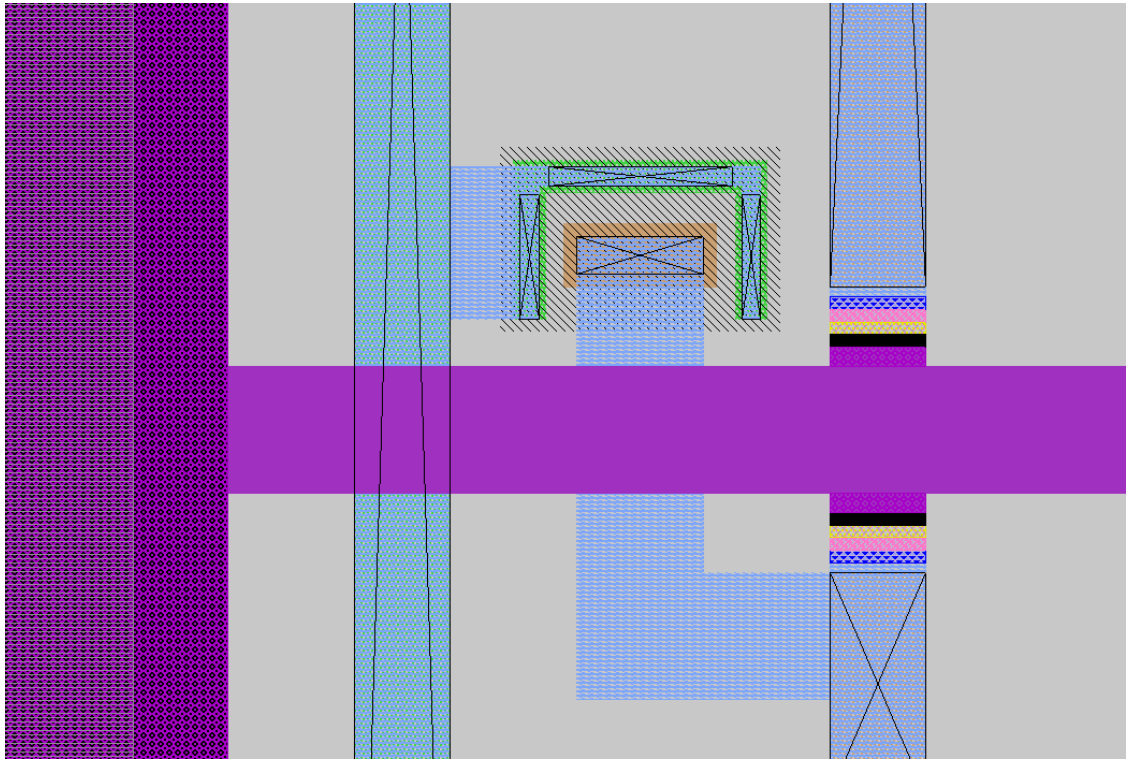

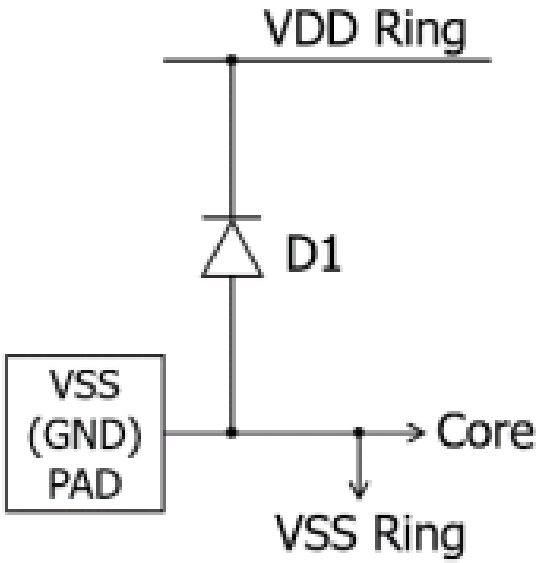

ESD protection

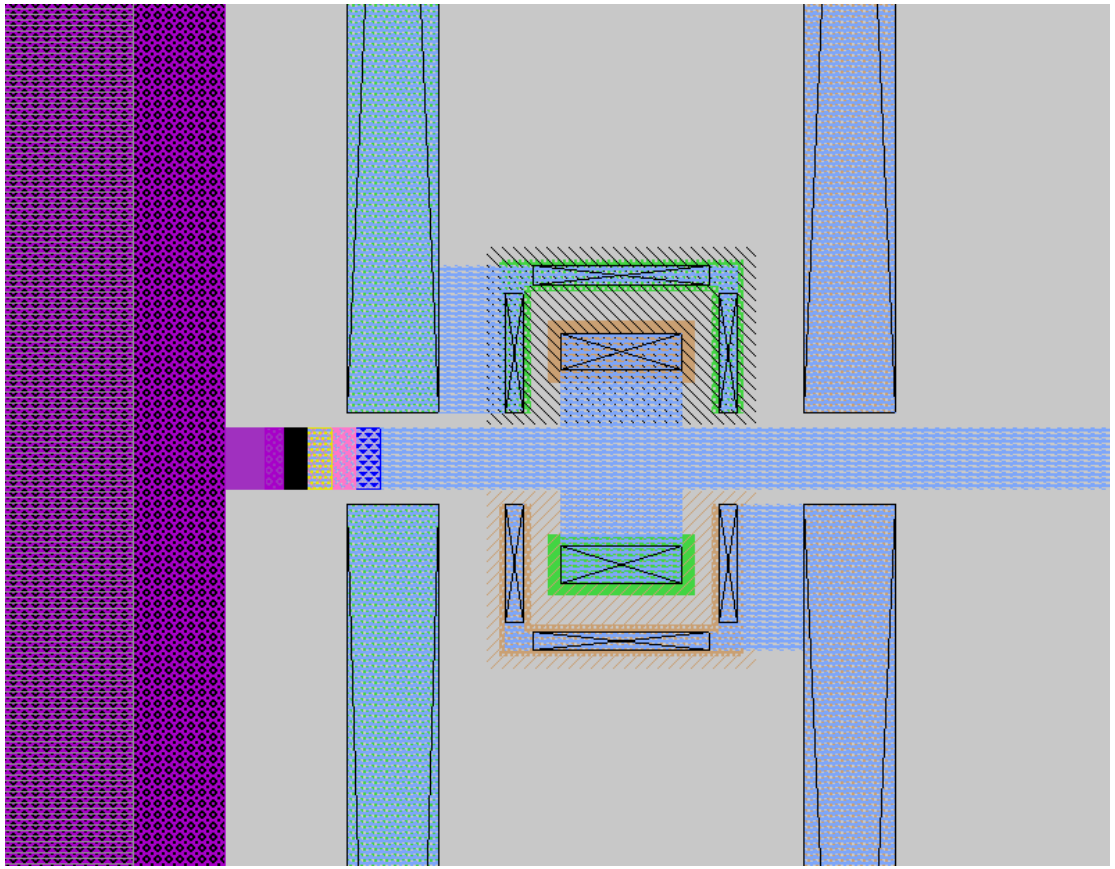

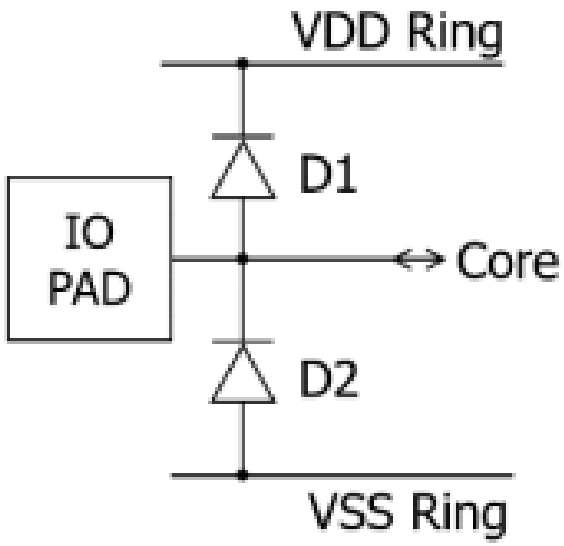

General test after extraction

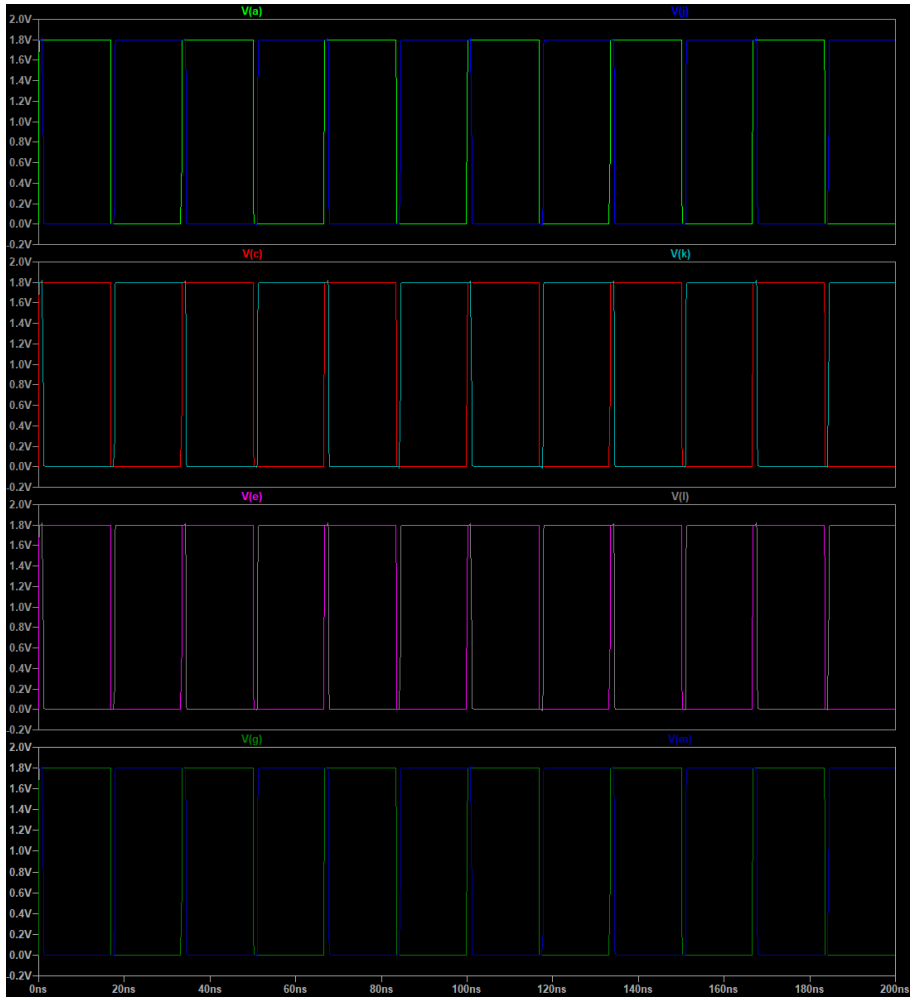

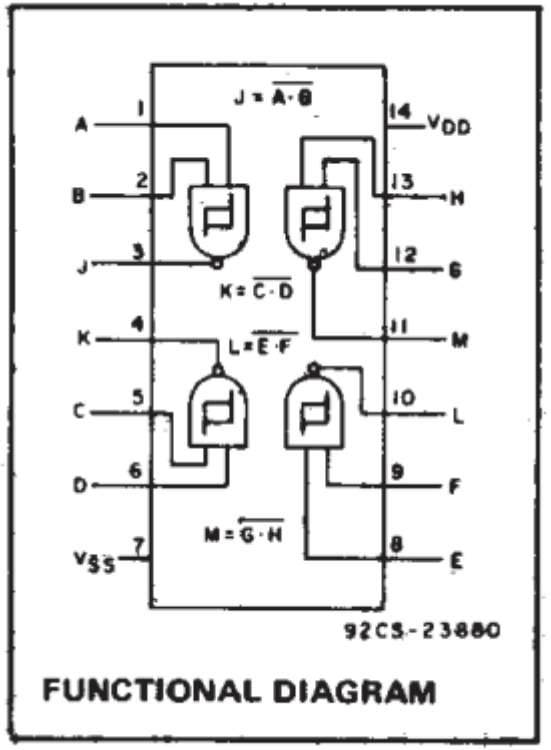

Pins A, C, E, G -> 30MHz Square wave
Pins B, D, F, H -> VDD

Hysteresis loop of Schmitt Trigger

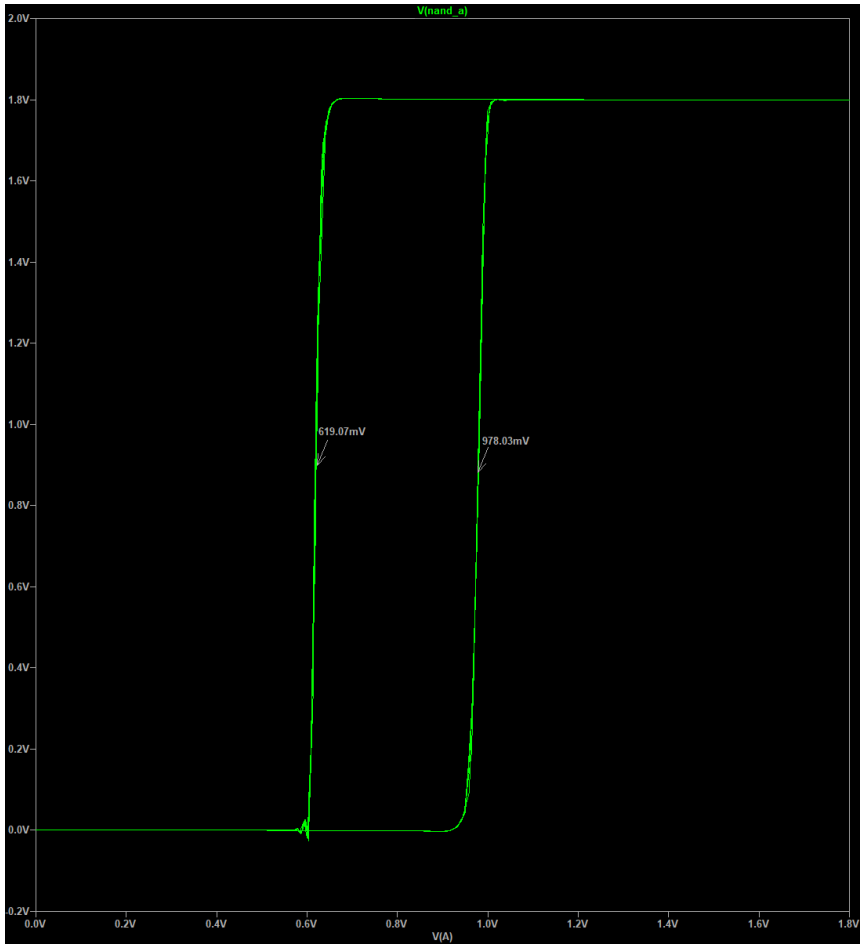

Pre-layout:
Vp = 966.2mV
Vn =633.1mV
Vh = Vp – Vn = 333.1mV

Post-layout:
Vp = 978.03mV
Vn = 619.07mV
Vh = 358.96mV

Buffer output waveform at 30 MHz

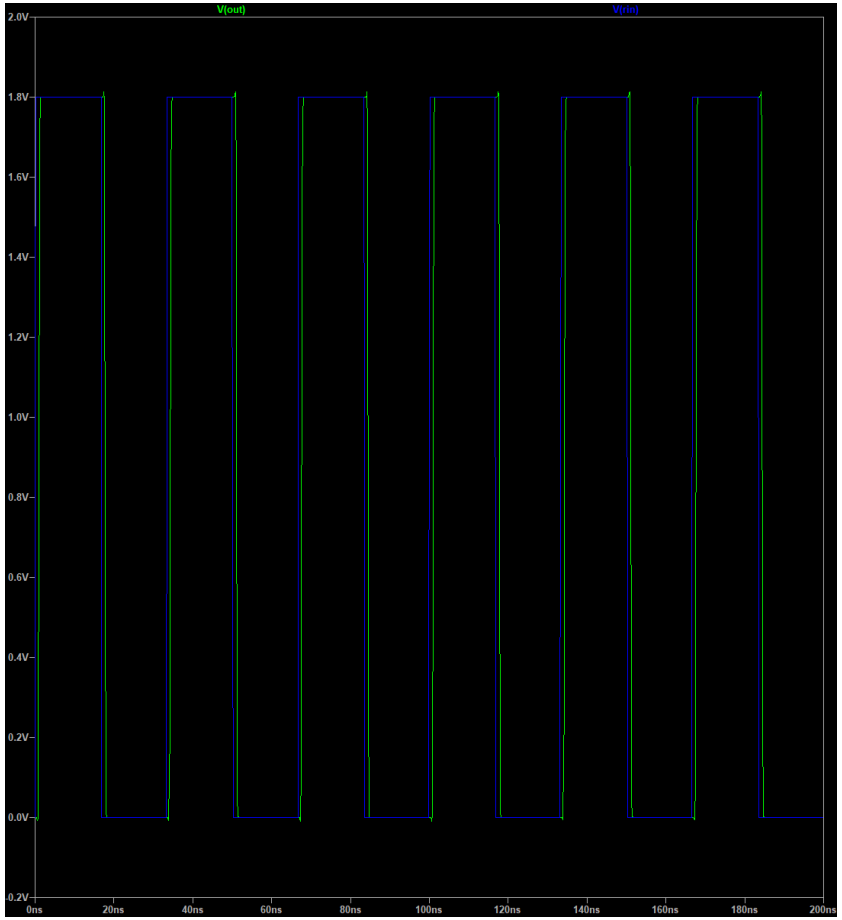

Buffer output waveform at 30 MHz for maximum and minimum temperature and VDD

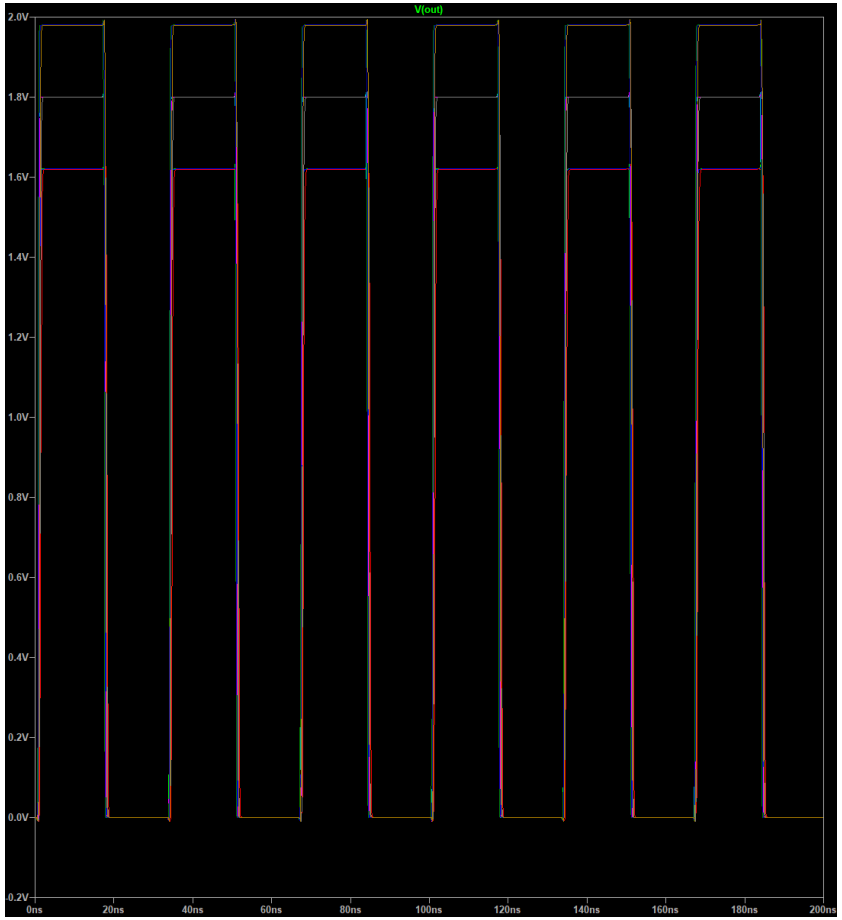

Maximum operating frequency of the buffer: approx. 630 MHz (without change)

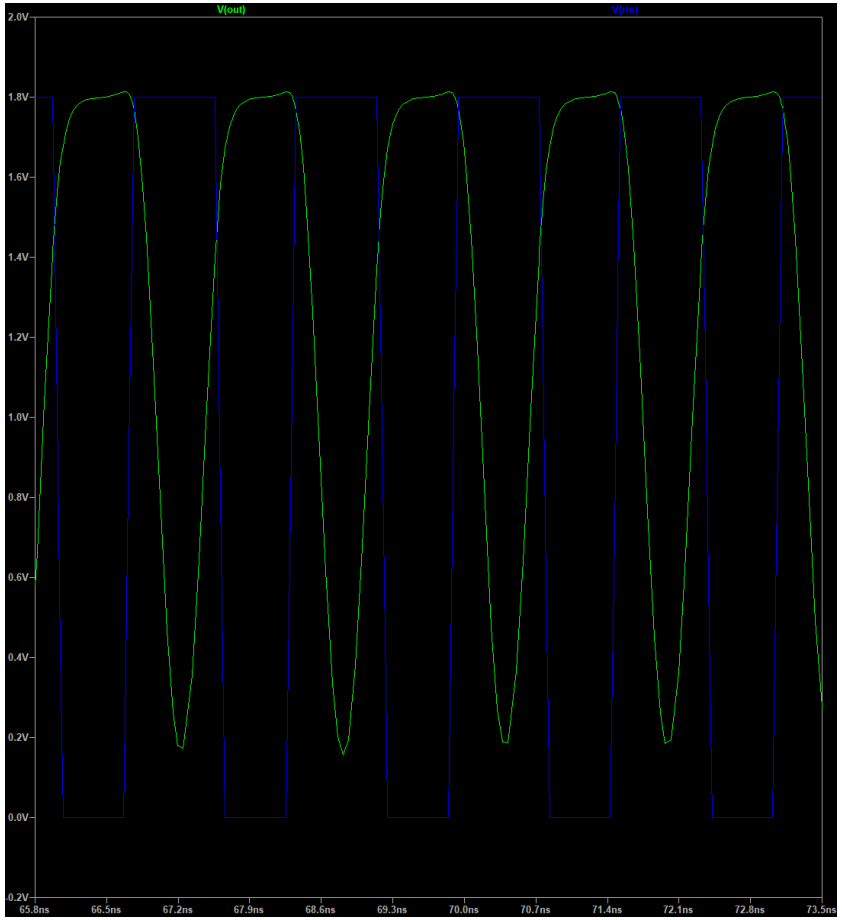

Rise time

Pre-layout:

326.1ps

Post-layout:

332.5ps

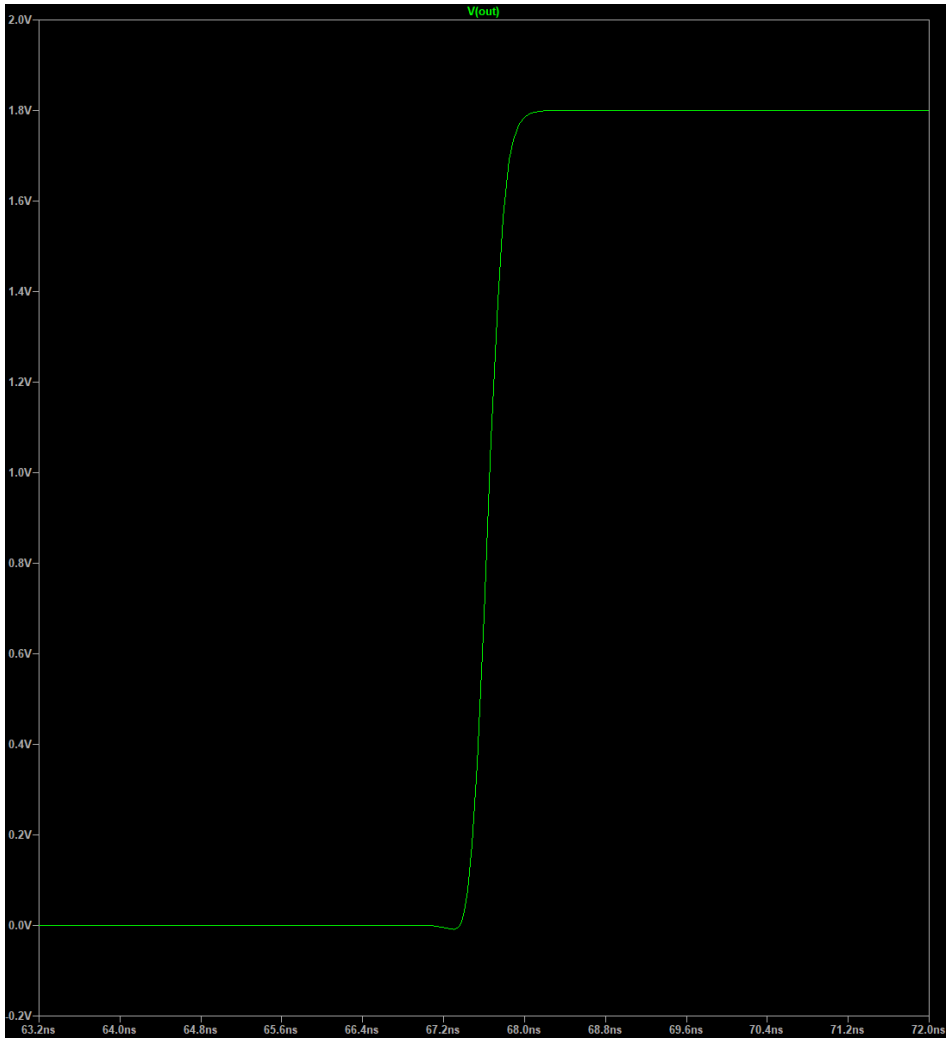

Fall time

Pre-layout:

313ps

Post-layout:

302.3ps

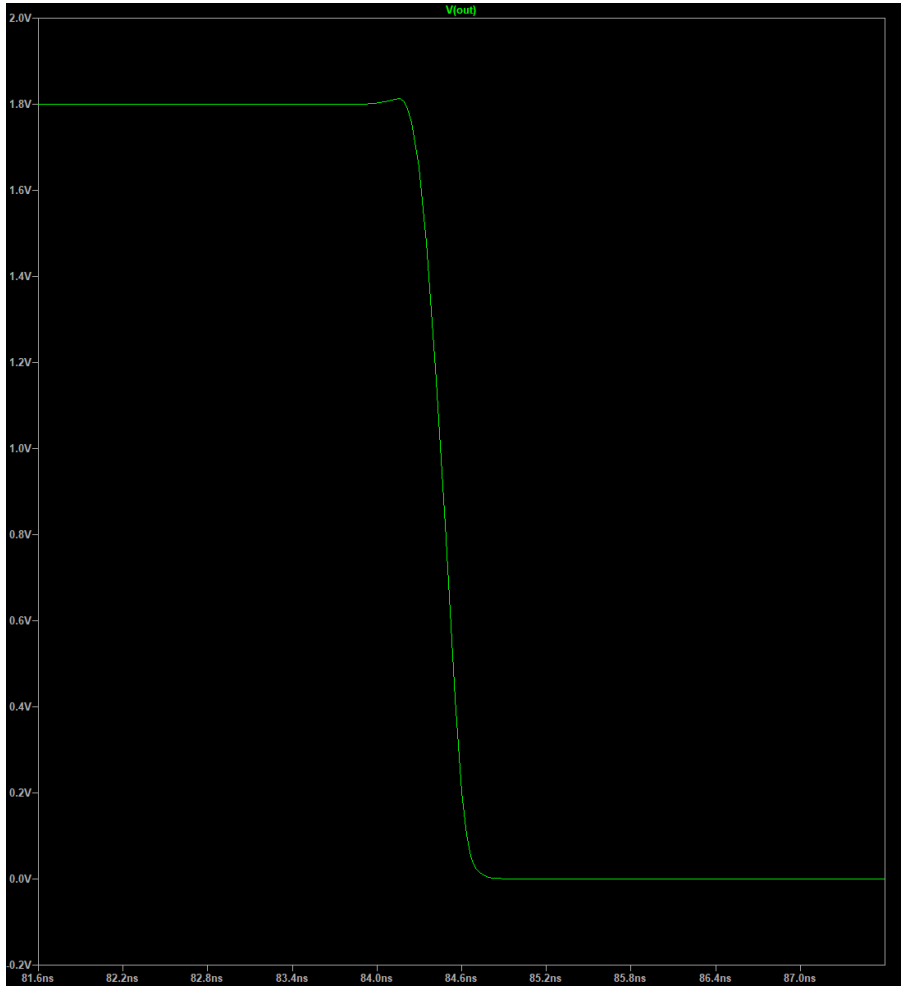

Buffer output current drive test (Io+)

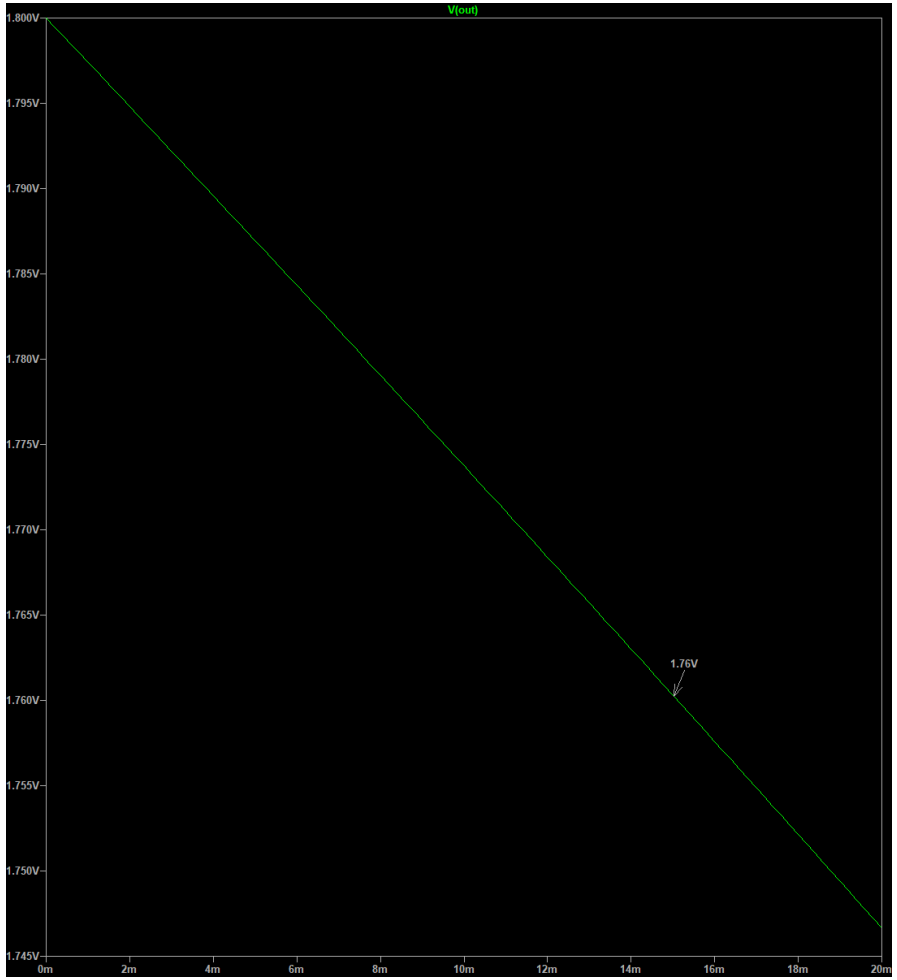

Pre-layout:
Vout for Io- = 15mA is 1.76V
Post-layout
Vout for Io- = 15mA is 1.76V

Buffer output current drive test (Io-)

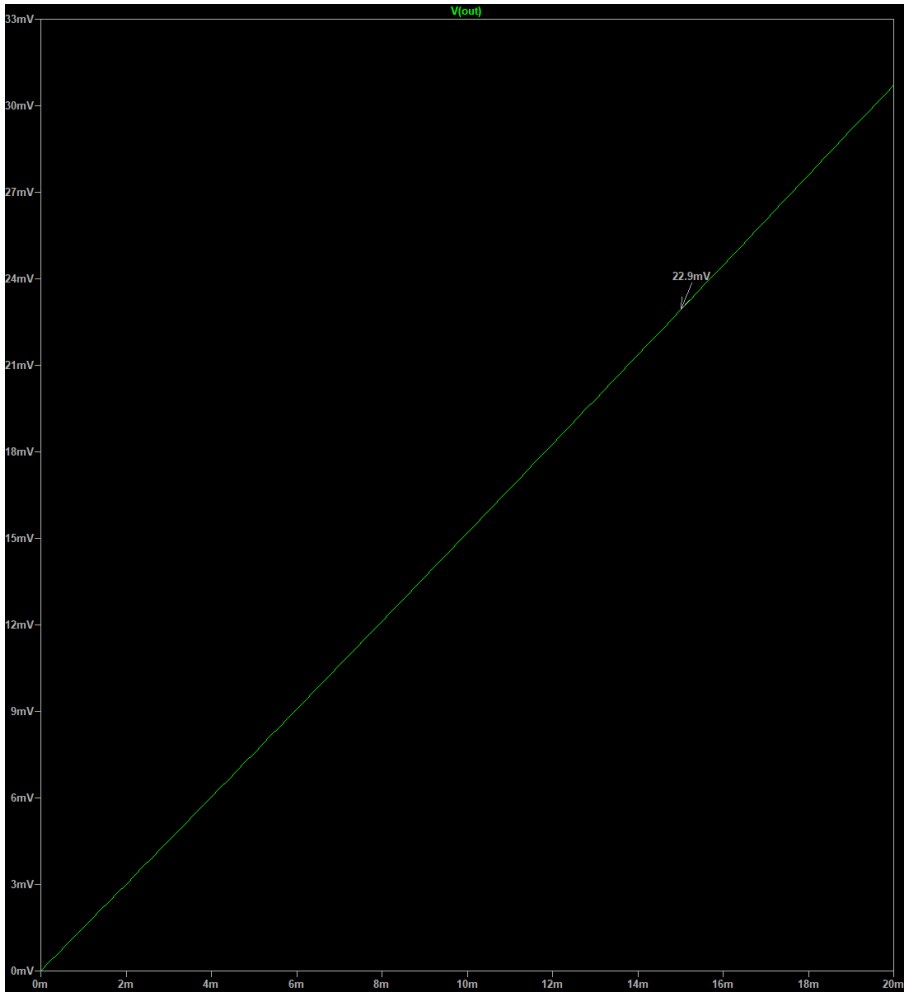

Pre-layout:
Vout for Io- = 15mA is 23.2mV
Post-layout
Vout for Io- = 15mA is 22.9mV